Chapter 19 Peripheral Cables (OPTIONS)

19.1 Options Cable Listing

Refer to the Figures listed in Table 19-1 Cable Options Listing. These figures show details on the connector pin wiring of GSE manufactured cables. Figures define connections from the indicator to the associated peripheral. The Conductor Color Code is also defined in the respective table.

GSE Cable Part Number	Recommended Cable Use	Pin Wiring: Reference Fig.#
299250-42020	Scanner/Keyboard Adapter Cable	Figure 19-2
299240-45080	450 to Standard Printer	Figure 19-4
299240-48080	450 to Eltron Printer	Figure 19-6
299250-44080	450 to PC/AT Computer	Figure 19-8
299240-49020	450 to PSC Scanner Adapter	Figure 19-10

Table 19-1 Cable Options Listing

Scanner/Keyboard Adapter Cable
(GSE Part Number 299250-42020)

This cable interfaces the 450 to a barcode scanner (available from GSE). PSC scanners are not washdown devices, the connectors used are simply standard D-Type connectors. Note that for use with the symbol laser scanner (LS8125 & LS8525), the adapter which GSE supplies with the scanner (Part # 210625-SSA01) is still required in order to use this cable. Cable length is 2 feet.

450 Series Connection	Color	PIN#
RX	GREEN	3
(550 series only)	WHITE	2
GND	BLACK	5
+5V	RED	9

Table 19-2, Scanner/Keyboard Adapter Cable

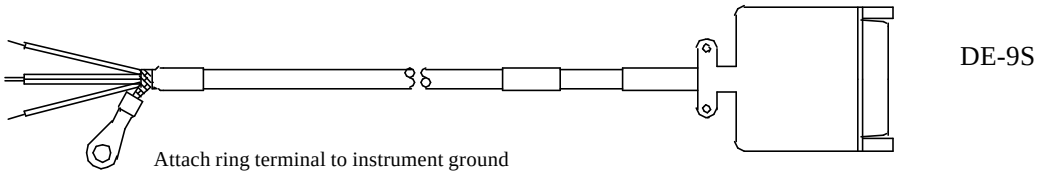

Figure19-1, Model 450 to Scanner/Keyboard Adapter Cable

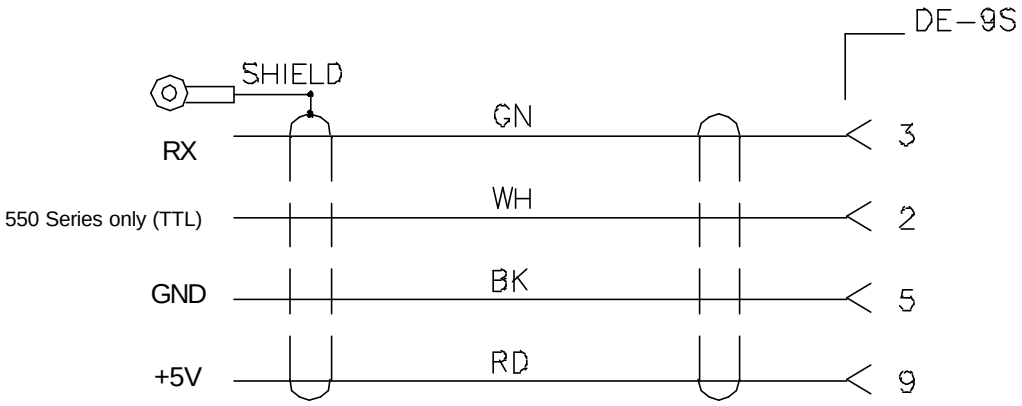

Figure 19-2, Model 450 to Scanner/Keyboard Adapter Cable Wiring Diagram

RS232 Cable for 450 Series to Standard Printer
(GSE Part Number 299240-45080)

This cable is used to interface a 450 series indicator to a standard line printer. Cable length is 8 feet.

450 Series Connection	Color	PIN#
TX	RED	3 (RXD)
GND	BLACK	7 (GND)
CTS	WHITE	20 (BUSY)

Table 19-3, Computer Style Printer Cable Connections

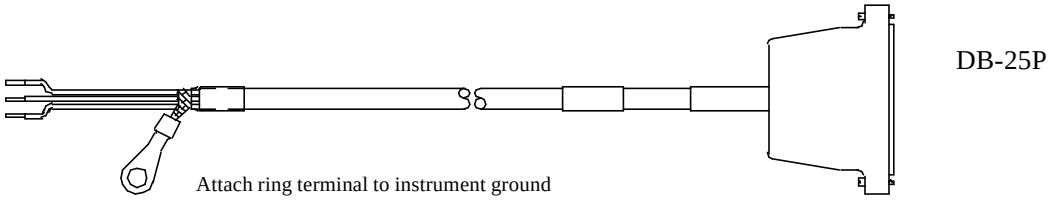

Figure 19-3, Model 450 to Standard Line Printer Cable

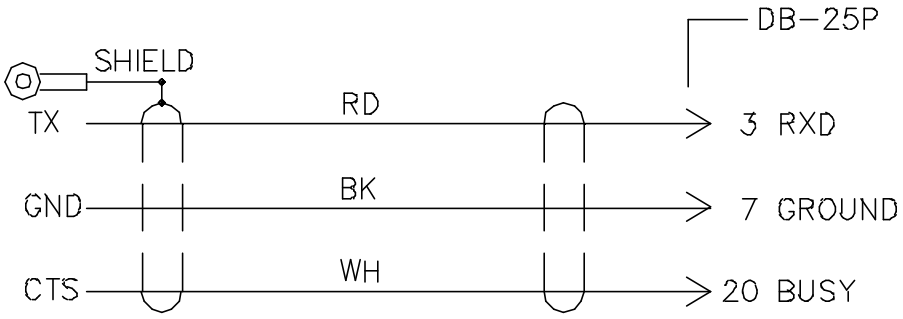

Figure 19-4, Model 450 to Standard Line Printer Cable Wiring Diagram

Model 450 Series to Eltron Thermal Printer
(GSE Part Number 299240-48080)

This cable is used to interface a model 450 series indicator to an Eltron Thermal Printer. Cable length is 8 feet.

450 Series Connection	Color	PIN#
TX	RED	3 (RXD)
GND	BLACK	5 (GND)
CTS	WHITE	6 (RDY)

Table 19-4, Model 450 to Eltron Printer Cable Connections

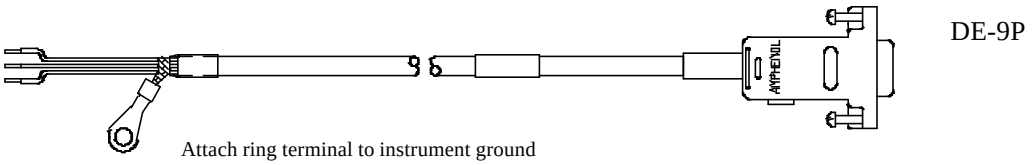

Figure 19-5, Model 450 to Eltron Printer Cable

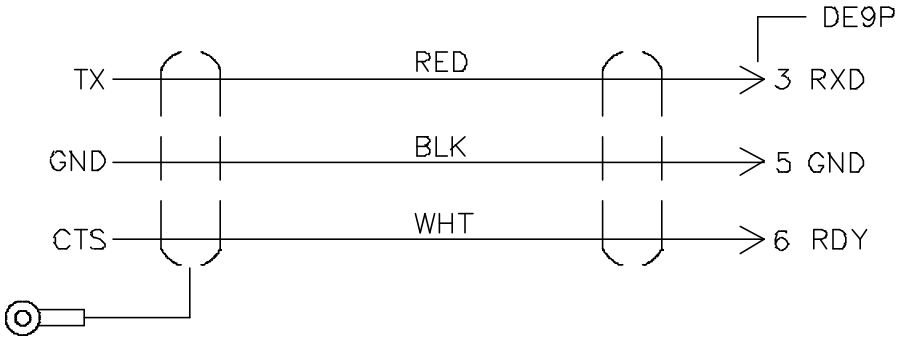

Figure 19-6, Model 450 to Eltron Printer Cable Wiring Diagram

Model 450 Series to PC/AT Computer Cable
(GSE Part Number 299250-44080)

This cable is used to interface a 450 series indicator to a PC/AT type computer. Cable length is 8 feet.

450 Series Connection	Color	PIN#
TX	RED	2 (RXD)
GND	BLACK	5 (GND)
RX	WHITE	3 (TXD)

Table 19-5, Model 450 to PC/AT Computer Cable Connections

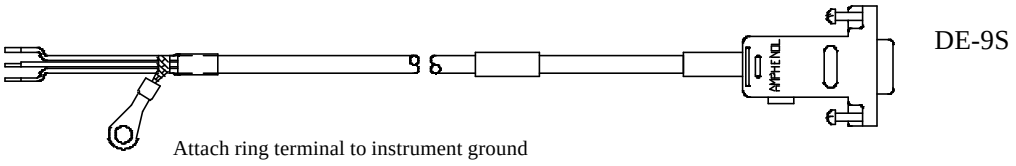

Figure 19-7, Model 450 to PC/AT Computer Cable

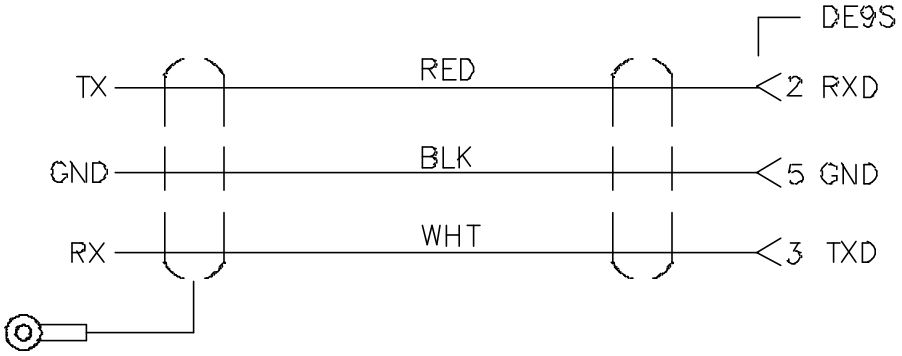

Figure 19-8, Model 450 to PC/AT Computer Cable Wiring Diagram

Model 450 Series Adapter Cable to PSC Scanner
(GSE Part Number 299240-49020)

This cable is used to interface a model 450 series indicator to a PSC Laser Scanner. Cable length is 2 feet.

450 Series Connection	Color	PIN#
RX	WHITE	2 (TXD)
GND	BLACK	5 (GND)
+5V	RED	4 (+V)

Table 19-6, Model 450 to PSC Laser Scanner Adapter Cable

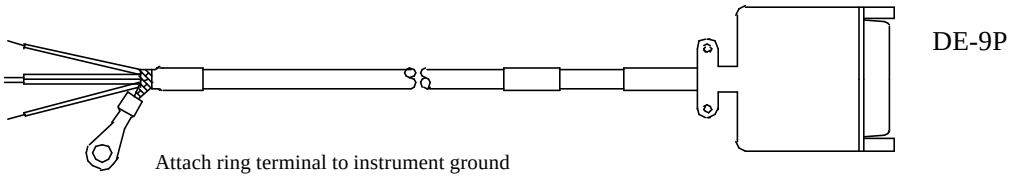

Figure 19-9, Model 450 to PSC Laser Scanner Adapter Cable

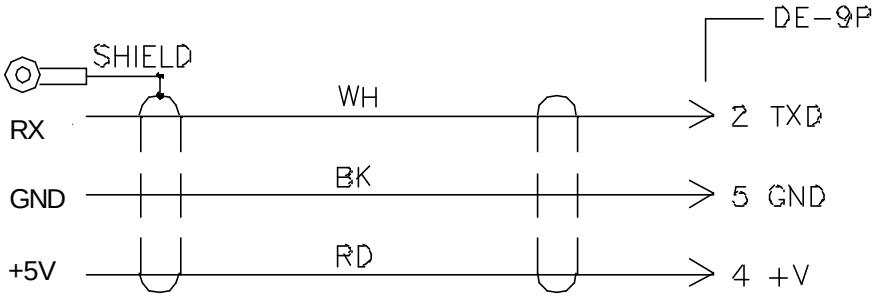

Figure 19-10, Model 450 to PSC Laser Scanner Adapter Cable Wiring Diagram