SECTION C Specifications

ELECTRONICS/FIRMWARE

Display Update Rate	Selectable, 0.1 - 20 sec.
A/D Conversion Rate	60 conv./sec. Response time to full scale, selectable 0.06 sec. to 8 sec.
Setpoint update rate	15 updates/sec.
Displayed Resolution	Recommended maximum: 25,000d Ultimate maximum: 100,000d
Display update rate	Selectable up to 20/sec. (0.05s)
Internal Resolution	+/-500,000 counts
Auto Zero Range	Selectable from 0.01% to 100% Full Scale
Automatic Zero Track	0.1 to 20.0 displayed counts with selectable delay
Non-linearity	0.005% of Full Scale (input dependent)
Multi-Point Linearization	Up to 5 Calibration Points
Full Scale Capacity	Fully Programmable
Weigh Units	Up to six separate units are selectable from an internal library of unit conversions, one of which may be user-defined for tons, grains, troy-ounces, etc.

C

ELECTRICAL

(450 external power supply)	
Power Module	120 VAC 60 Hz input, 16 VAC output, wall mount
Power Input (AC)	10 VAC to 28 VAC, 50/60 Hz standard
Power Input (DC)	10 VDC to 28 VDC compatible
Fuse	2.0 amp Slo-Blo
(450/455 internal power supply)	
Power Module	90 to 250 VAC 60 Hz input
Fuse	250V @ 0.5 amp Slo-Blo

DATA ENTRY REGISTERS

Data Registers	1 numeric incremental register, 2 setpoint target registers Net and Gross Accumulation registers

COMMUNICATIONS

Communication Port	Port 1: Bi-directional RS-232 (software/hardware or no handshake)
Custom RS-232 Output	Custom Transmit Table for formatting special labels, transactions, etc.
Transmit	Continuous, On Request (motion inhibited selectable) or once per weighment
Baud Rate	Selectable from 150 through 19,200
Protocol	Selectable

LOAD CELL

Load Cell Connection	Six lead with sense, or four lead acceptable
Power	Drives up to (8) 350 ohm load cells
Signal Range	0.1 to 10 mv/v at Full Scale
Load Cell Excitation	10 VDC, short circuit protected
Load Cell Current	290 mA, maximum

ENCLOSURE

Enclosure	Stainless steel washdown, designed to NEMA 4X specifications
Switch Panel Type	Molded elastomeric with switch travel. Self-sealing, chemically resistant.
Switch Panel Controls (m450)	Zero, Tare, Print, Units, Enter and CLR. Additional

	functions accessed with the Select key.
Operating Temperature	-10 to +40 degrees C
Size w/o Stand ... (m450)	9.38" Wide by 6.43" High by 1.88" Deep
Overall Size	11" Wide by 7.23" High by 3.70" Deep
Weight	(M450) approx. 6 lb., (M455) approx. 6.5 lbs.

DISPLAY

Display	Six fully active digits plus 10 character dot matrix, vacuum fluorescent
Display Size	0.75" high digits
Display Blanking	At 104% of capacity
Display Increments	Range: .00001 to 500 with 24 selections, Decimal Point (Selectable),
least	significant digit selectable at 1, 2 or 5.
Negative Gross Display	Fully bipolar up to 99,999
Polarity Symbol	sign to left of most significant active digit
Status Indicator	10 character dot matrix display

ADDITIONAL INFORMATION

Time Interval Data Ouput	Set RS-232 transmission based on selected time intervals
Remote Keys	1, remote key connection available
Setpoints	2 Open Drain Type Outputs (FET)
Approvals	USA: NTEP COC #93-092 (firmware before 7/20/95)
	USA: NTEP COC #95-145 (firmware starting 7/20/95)
	Canadian W&M: (AM-5001, Rev. 1)
Warranty	One year covering defective parts and workmanship

OPTIONS

Battery-backed Time and Date	Option Module
Cable Options	Peripheral cables
Compatible Peripherals	Printers, Remote Displays, etc.
Memory Expansion	Up to 2Kbytes Total
Relay Module Option	Up to 2 relay outputs

MOUNTING DIMENSIONS

Refer to Figures C-1 thru C-3, 450/455 indicator mounting dimensions information (all models).

C

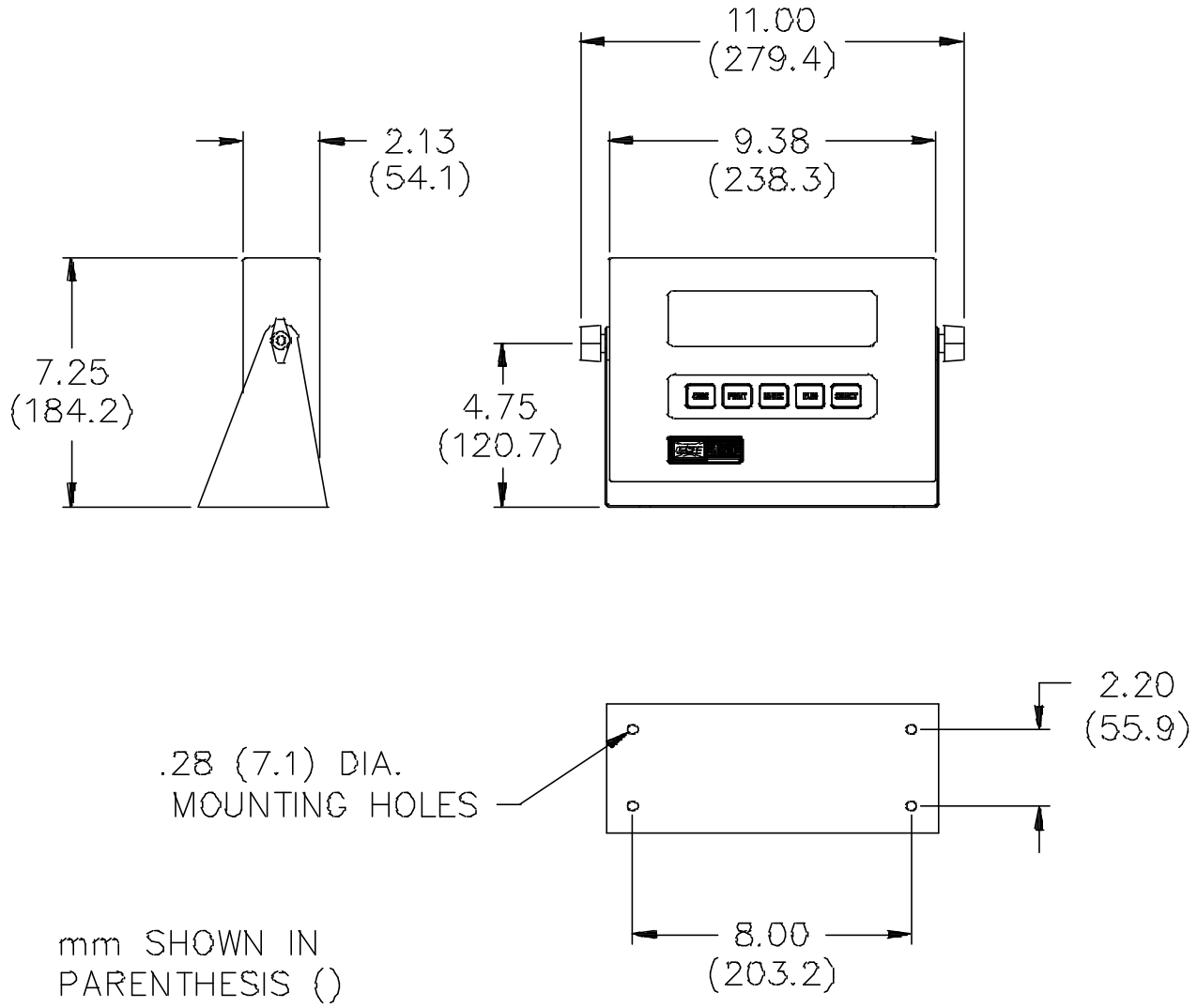

Figure C-1 Model 450 indicator mounting holes and overall dimensions

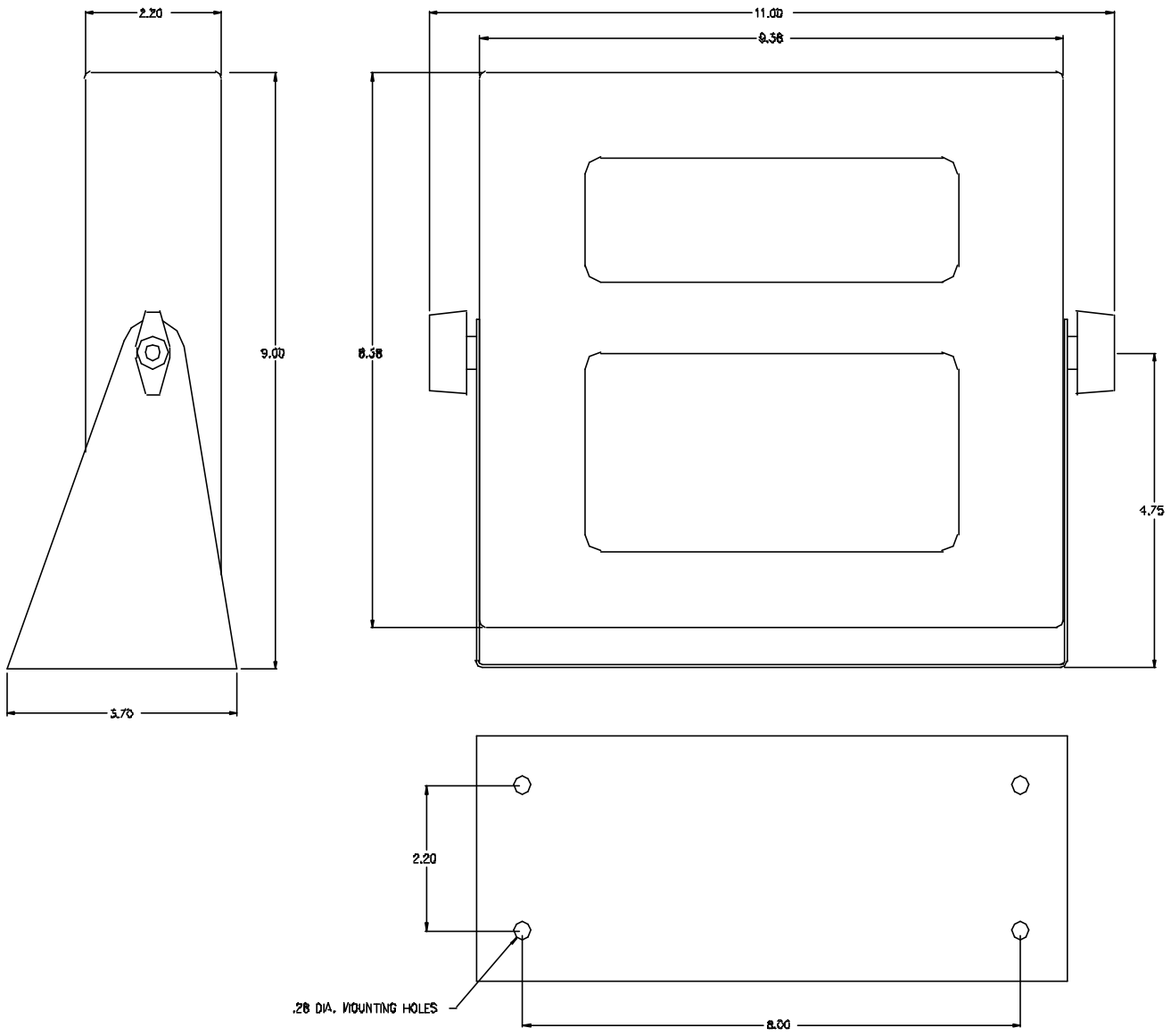

Figure C-2 Model 455 indicator mounting holes and overall dimensions

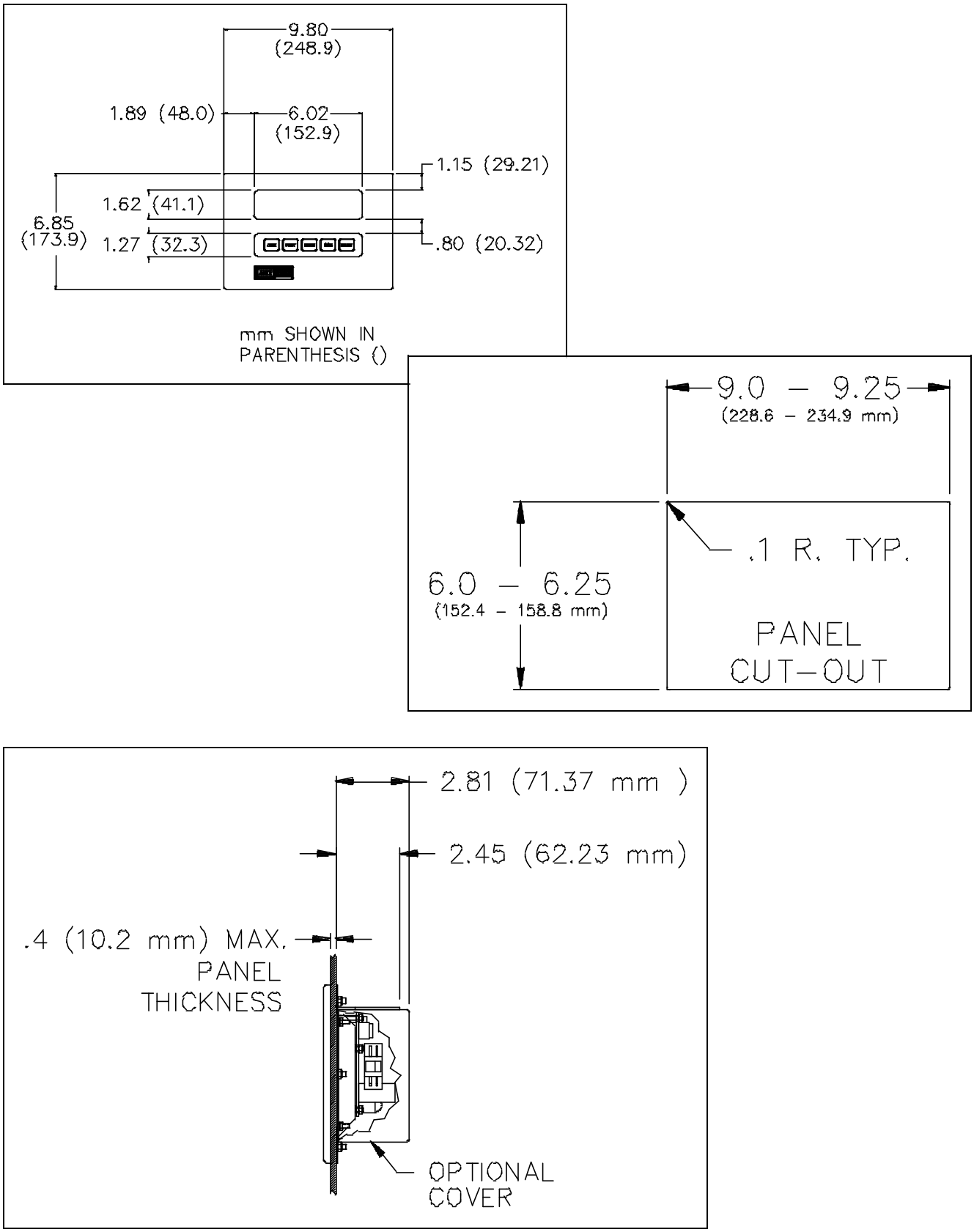

Figure C-3 Model 450 Panel mount version cut out and mounting dimensions