Chapter 18 Compatible Peripheral (OPTIONS)

18.1 Compatible Peripheral Options

GSE offers a number of very useful peripheral equipment options which should be considered in your weighing system design. Refer to Table 18-1 Peripheral Equipment Options for a complete listing. Each of these options has been tested and approved for compatibility with the Model 450 Weigh Indicator. Consult with the GSE factory for additional technical data on a particular piece of optional equipment. The cable options described in Chapter 19 will permit you to easily implement the connection between your indicator and the peripheral.

18.1.1 Peripheral Output Devices

The indicator permits one peripheral device to be connected to the bi-directional RS-232 COMM port.

18.1.2 Peripheral Inputs

The indicator allows for a serial RS232 bar-code scanner input device. This will strictly be used with the input interpreter feature. An example might be scanning in tare weights. See chapter 8 Communications.

18

GSE Part Number	Peripheral Equipment Description
249315-00962	Dot Matrix Document Printer (Panasonic Line Printer with RS-232 interface)
41-10-0820 (2" print head) 41-10-0840 (4" print head)	Eltron Thermal Label Printers
41-45-29000	PSC Laser Scanner

Contact GSE for availability

Table 18-1 Peripheral Equipment Options

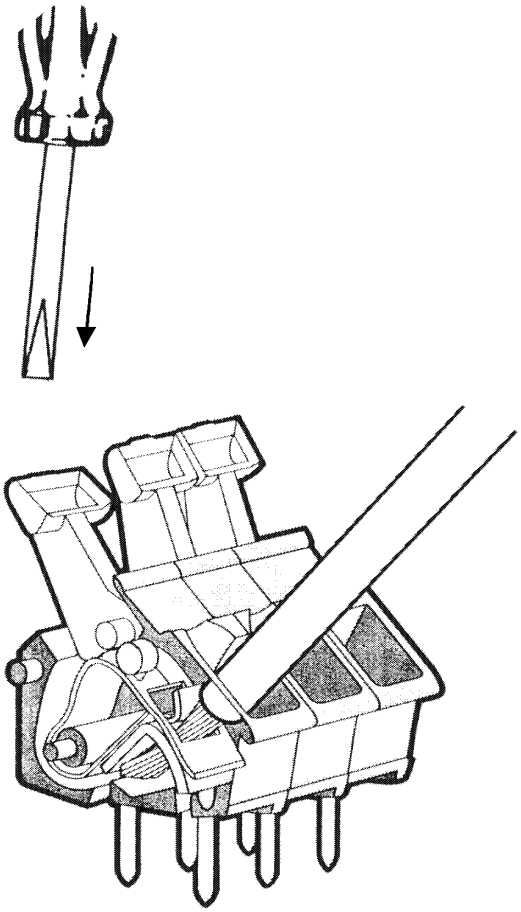

Figure 18-1 Connector

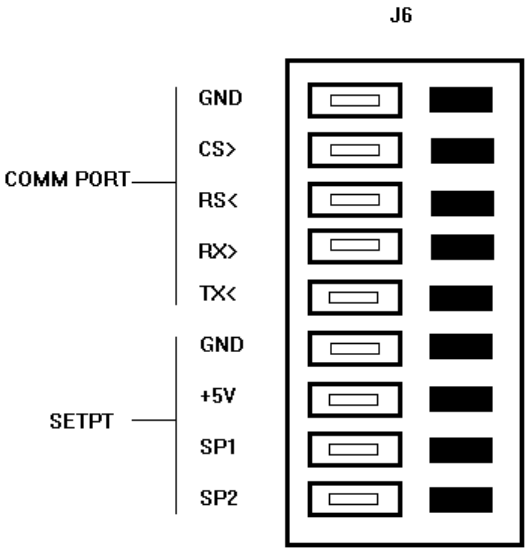

Figure 18-2 RS232 Port (J6)