Appendix E 450 Series Exploded Views and Parts Listings
(Mechanical)

E

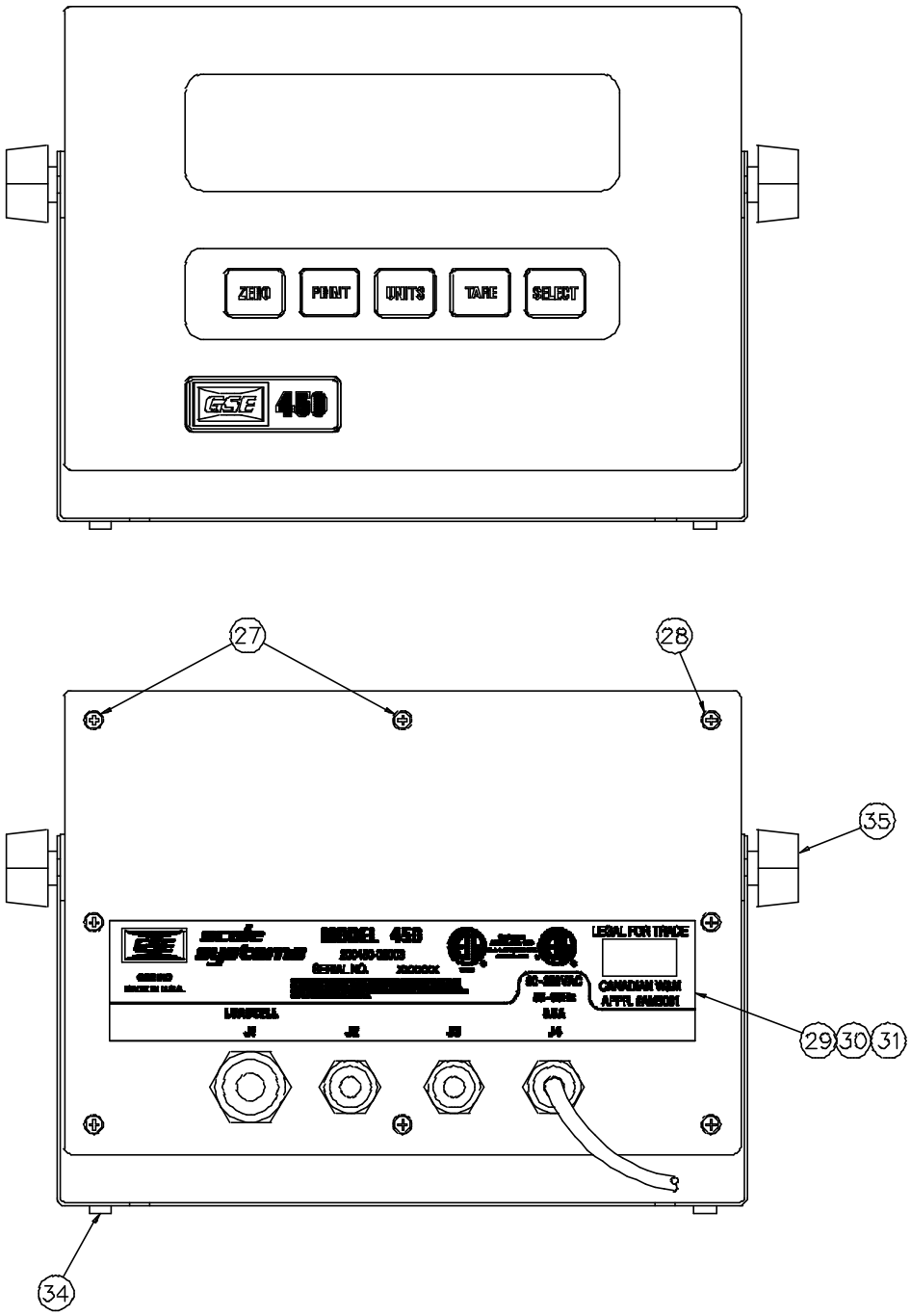

Figure E-1 Front/Rear enclosure views of M450 ***external*** *power supply version*

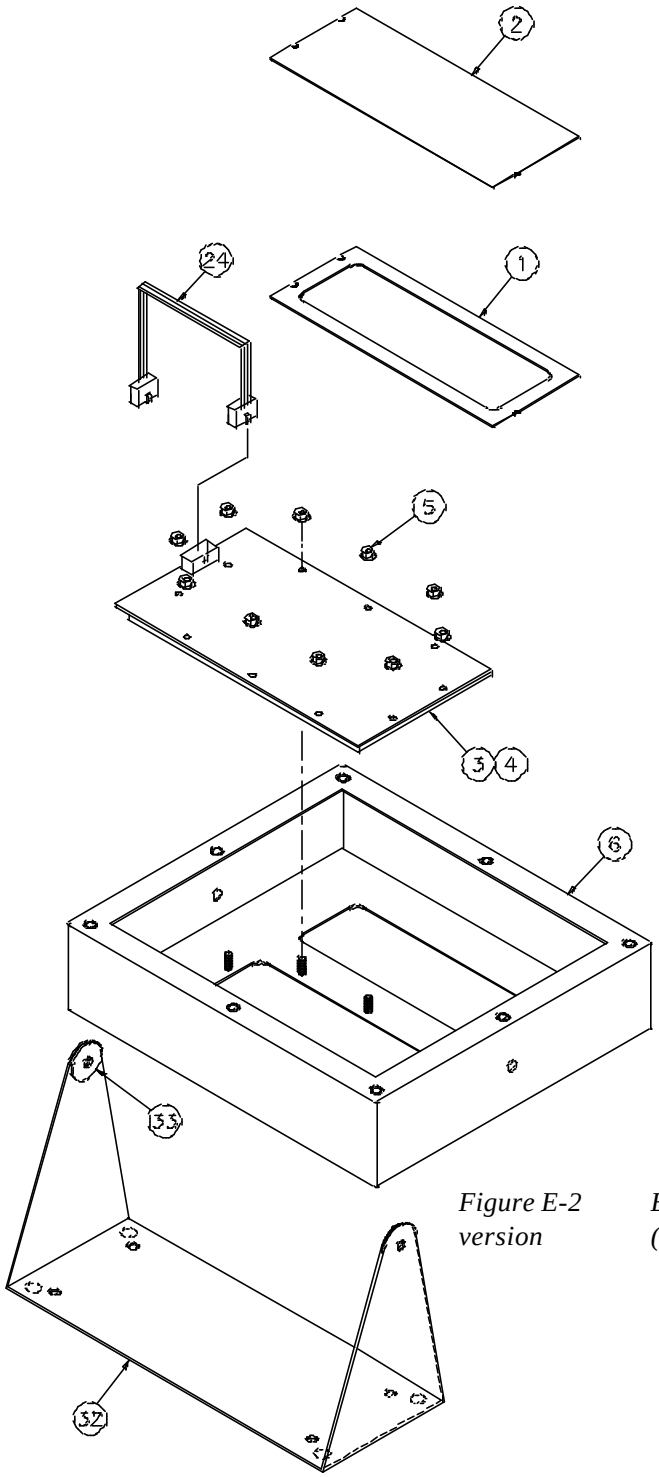

Figure E-2 Exploded View 1 of M450 ***external*** *power supply version (Housing/Keypad/Lens)*

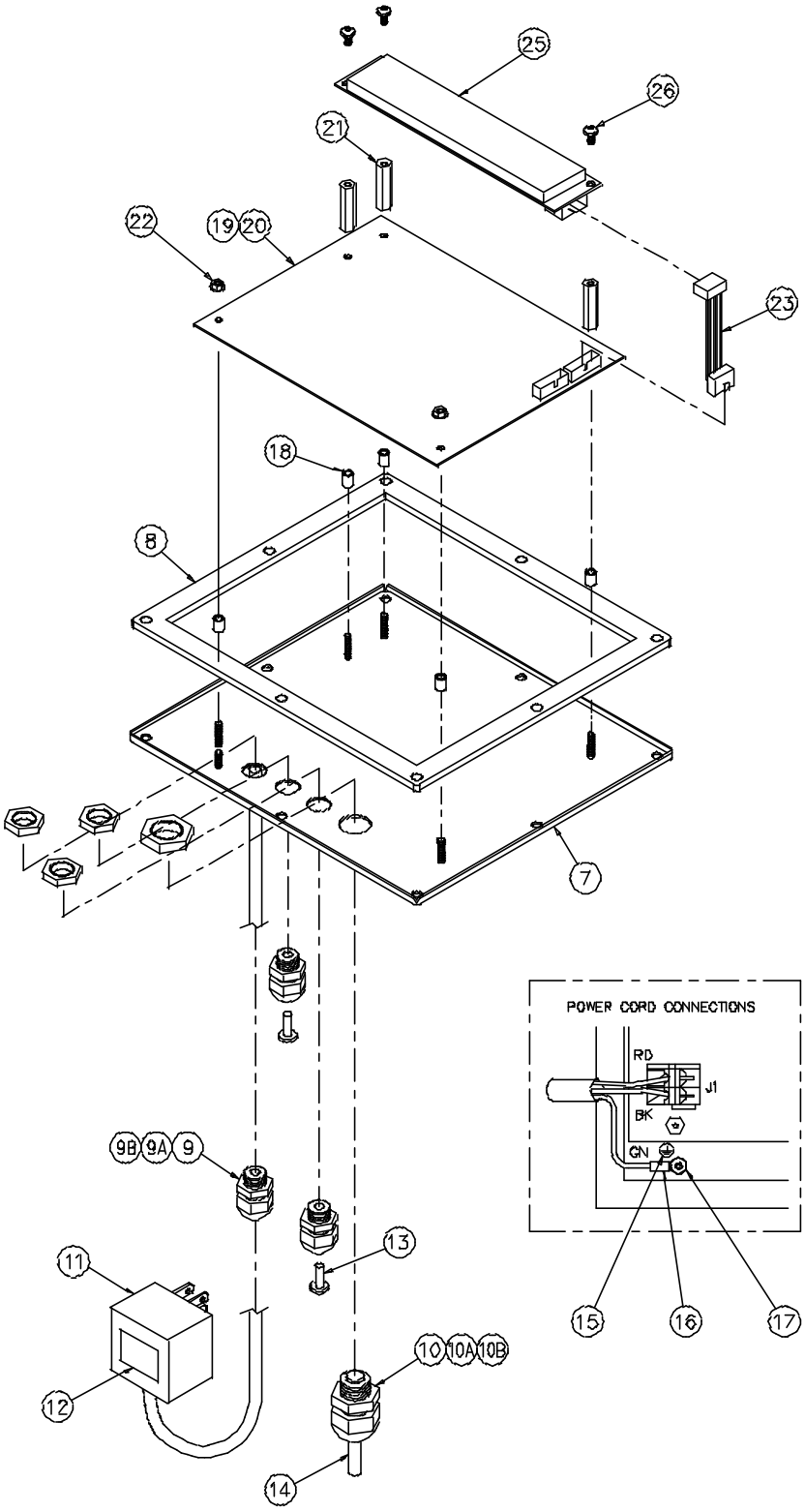

Figure E-3 Exploded View 2 of M450 ***external*** *power supply version (Back panel/Connectors/Main Board)*

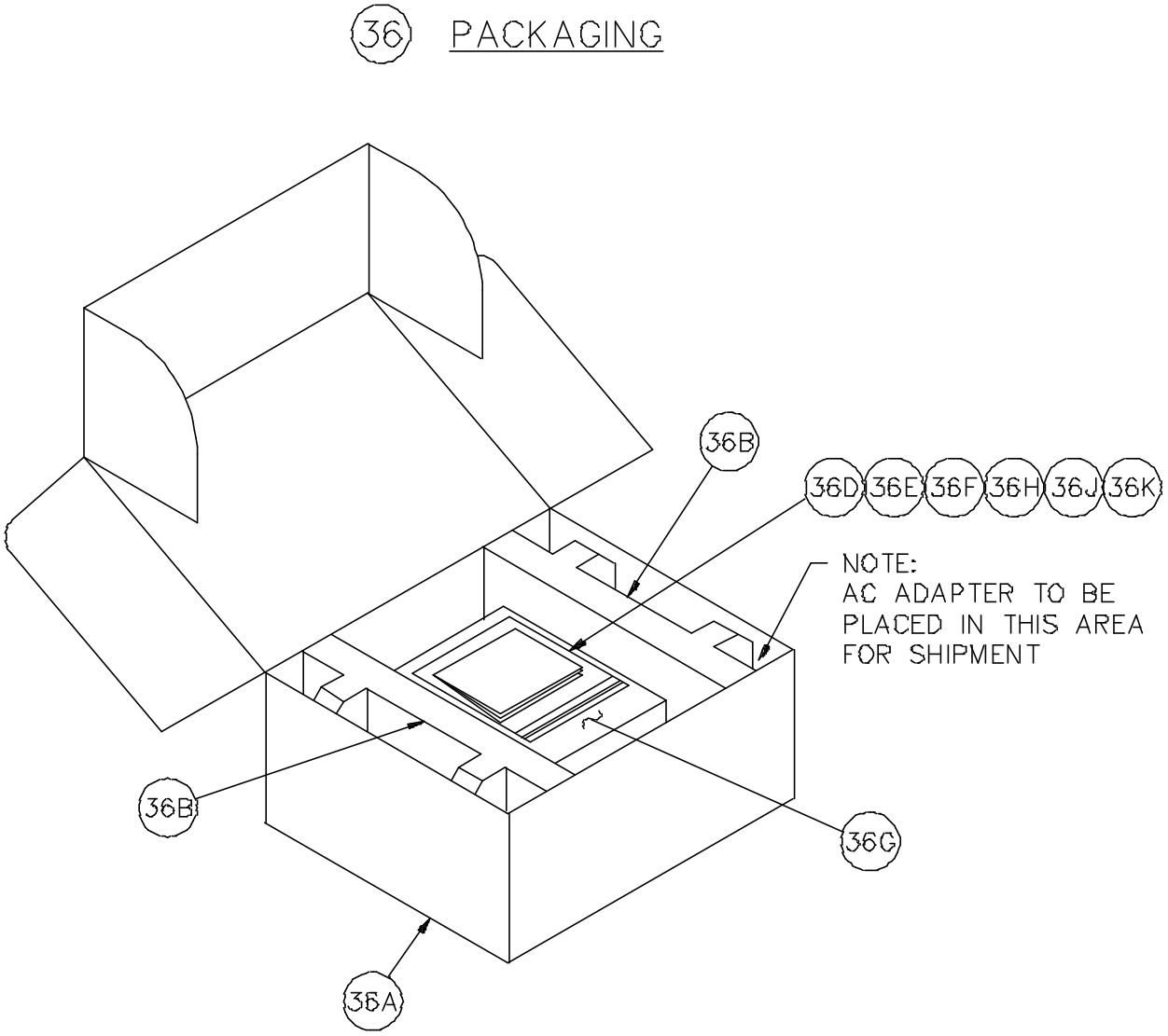

Figure E-4 Packaging Material for M450 ***external*** *power supply version (Items needed for Shipping)*

		1	36K	28-10-31249	B,LABEL, CAPACITY-CE,CER, M450
		1	36J	28-10-31248	B,LABEL, CAPACITY-CE,UK, M450
	1		36H	28-10-25531	A, LABEL-CAPACITY, M450/550/570
1	1	1	36C	42-90-00911	GUSSETED POLY BAG
1	1	1	36F	28-10-29054	LABEL, TARE/SETPOINT
1	1	1	36E	39-10-28956	MODEL 450 USER'S GUIDE
1	1	1	36D	42-90-08810	ZL8X10X2, 8X10, ZIPLOC BAG
2	2	2	36B	42-95-29086	72196, END CAP, SHIPPING - PULP
1	1	1	36A	42-95-28689	SHIPPING BOX, M550
1	1	1	36	200450-KIT00	BOX, PACKING MAT'L, MANUAL
2	2	2	35	15-10-4087	3087 HD DAVIES,M5X.8X10MM
4	4	4	34	31-80-0277	LO-SKID,7/16" HEX,1/16" THK
2	2	2	33	44-30-25506	ACTION FAB. WASHER RUBBER
1	1	1	32	44-25-25502	SWIVEL BRACKET
		1	31	28-10-30017	B, REAR LABEL, M450, INT'L
	1		30	28-10-30016	B, REAR LABEL, M450, CANADA
1			29	28-10-28942	B, REAR LABEL-M450 SCALE IND.
6	6	6	28	38-31-6218	M5x.8-18 HEX PHLPS SS INT SEM
2	2	2	27	38-31-29593	A, M5x.8-18 TAMP-PRF,HEX, PH2P
3	3	3	26	38-26-3818	M4X.7,10mm FILLIST, PHLPS, SEMS
1	1	1	25	07-12-25500	CUSTOM VFD MODULE
1	1	1	24	22-30-28949	B, CABLE, 2X3X8" RIBBON, IDC
1	1	1	23	22-30-25519	B, CABLE, 2X5X1.5" RIBBON, IDC
2	2	2	22	38-26-1640	M4.7, KEPS LOCK NUT-SP
3	3	3	21	17-20-3010	AL5083-4070-25.0-22,LYN-TRON
	1	1	20	420792-29733	PC792 M450 MAIN BOARD, CANADA
1			19	420777-28929	PC777 M450 MAIN BOARD
5	5	5	18	17-40-0138	R912-05, RICHCO .25 OD X .3125 LG
1	1	1	17	38-26-1640	M4.7, KEPS LOCK NUT-SP
1	1	1	16	27-40-0100	RA863, T&B, INS RNG TRM #22-16
1	1	1	15	28-10-27115	A, IEC GROUND SYMBOL
1	1	1	14	31-20-0365	9779-513-4 AMPHENOL BOOT, .220
2	2	2	13	31-80-0239	8662-0014,3/4" SLOTTED BLK PLUG
1	1		12	28-10-29053	A, LABEL, TRANSFORMER P/N
1	1		11	20-20-3620	338-2016-0001A, AULT, WALL XFMR
		1	10B	26-20-1876ML	6080-118,SCHLEMMER,PG11 LOCKNUT
		1	10A	26-20-1876M	4220011,SCHLEMMER,PG11,STRNRLF
1	1		10	26-20-1876	S2111-BLK, QLFLEX LIQ. TITE FIT.
		3	9B	26-20-1873ML	6080-096,SCHLEMMER,PG9 LOCKNUT
		3	9A	26-20-1873M	4220009,SCHLEMMER,PG9 STRNRLF
3	3		9	26-20-1873	S2109, BLK QLFLEX LIQ. TITE FIT.
1	1	1	8	44-30-30054	C, GASKET, REAR PANEL, M450, SIL.
1	1	1	7	44-25-28905	REAR PANEL, M450, SS
1	1	1	6	44-25-28904	HOUSING, M450, SS W/LOGO
10	10	10	5	38-26-1640	M4.7, KEPS LOCK NUT-SP
		1	4	420783-29617	PC783 KEYPAD ASSEMBLY M450 INT'L
1	1		3	420783-28937	PC783 KEYPAD ASSEMBLY M450
1	1	1	2	44-70-28756	LENS, ADHESIVE MOUNTED, M450
1	1	1	1	44-30-28844	GASKET, DISPLAY LENS, M450
				200450-00002	M450I WASHDOWN WEIGH MTR. INT'L
				200450-00001	M450 WASHDOWN WEIGH MTR. CANADA
				200450-00000	M450 WASHDOWN WEIGH MTR. STD
QTY REQ'D			ITEM NO.	PART NO.	DESCRIPTION/MATERIAL
BILL OF MATERIAL					

Select model # to determine correct part numbers and quantity.

Table E-1 Parts Listing for M450 ***external*** *power supply version*

E

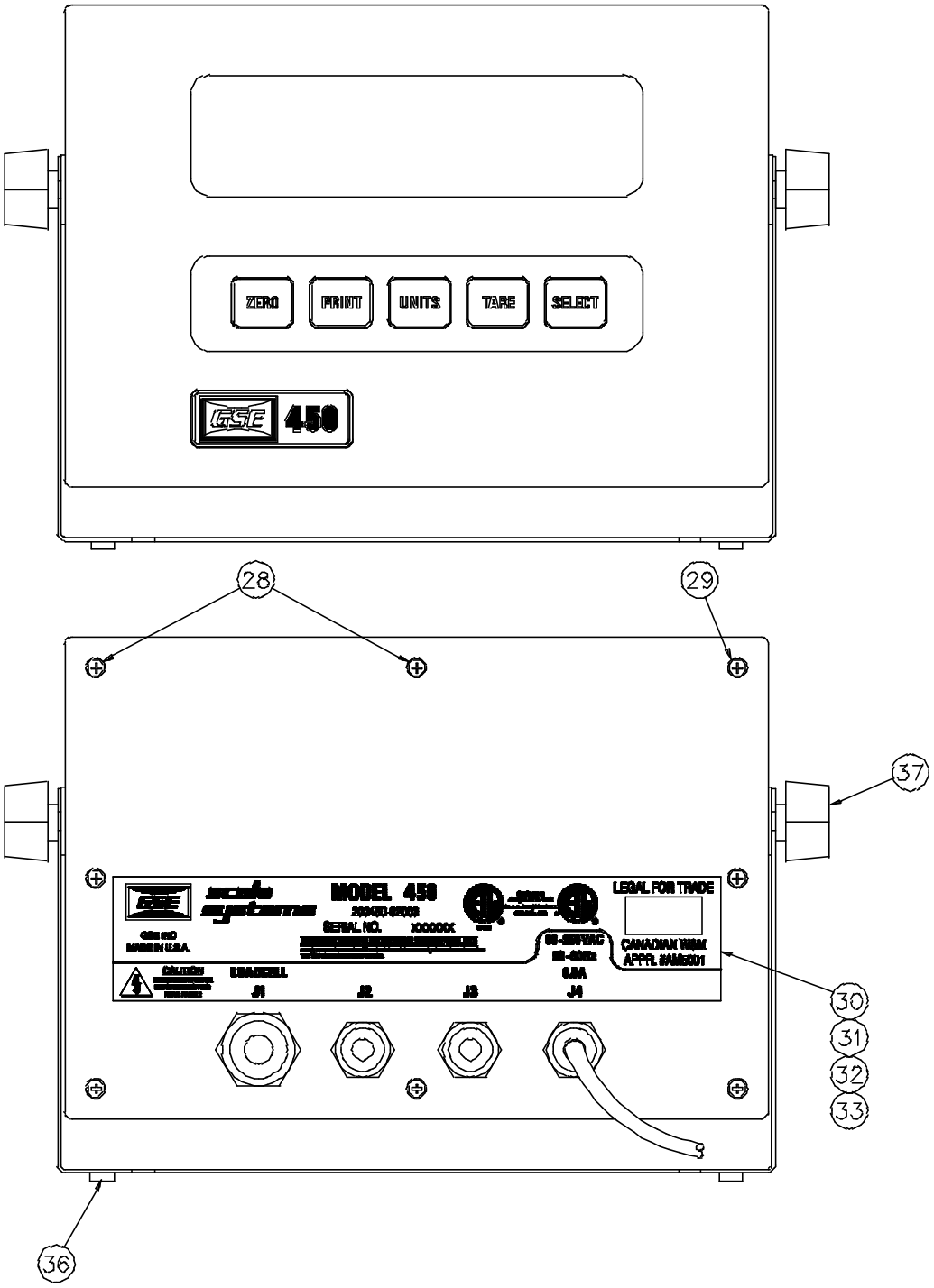

Figure E-5 Front/Rear enclosure views of M450 ***internal*** *power supply version*

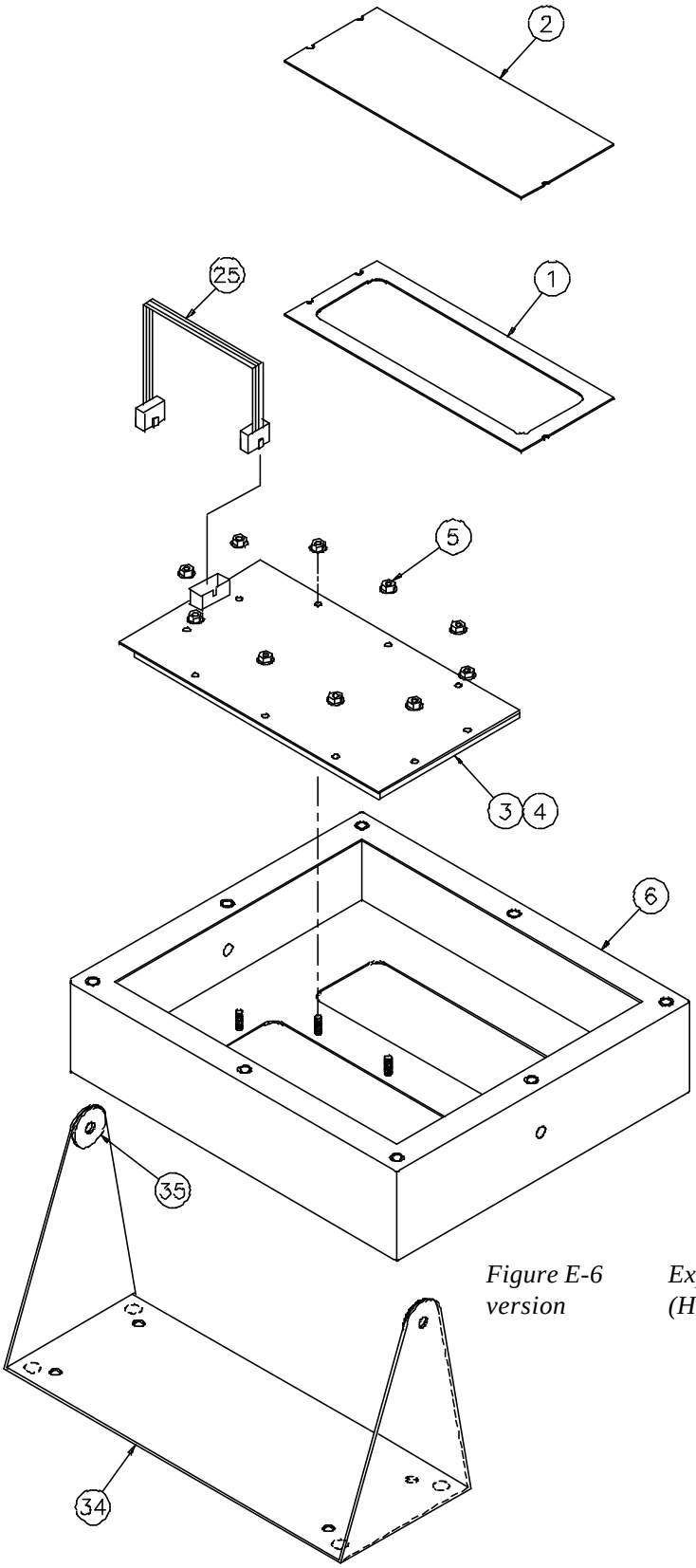

Figure E-6 Exploded View 1 of M450 ***internal*** *power supply version (Housing/Keypad/Lens)*

E

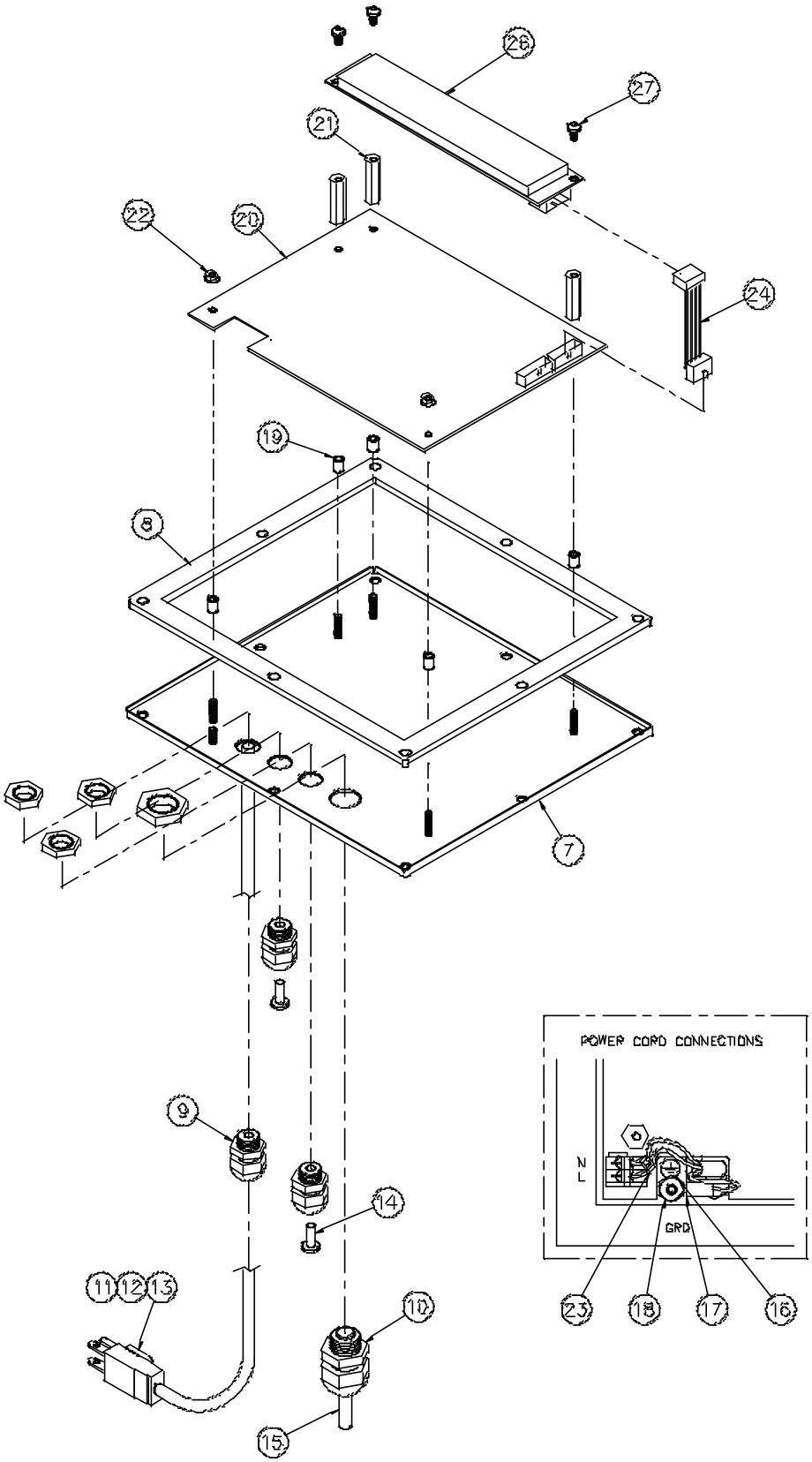

Figure E-7 Exploded View 2 of M450 ***internal*** *power supply version (Back panel/Connectors/Main Board)*

E

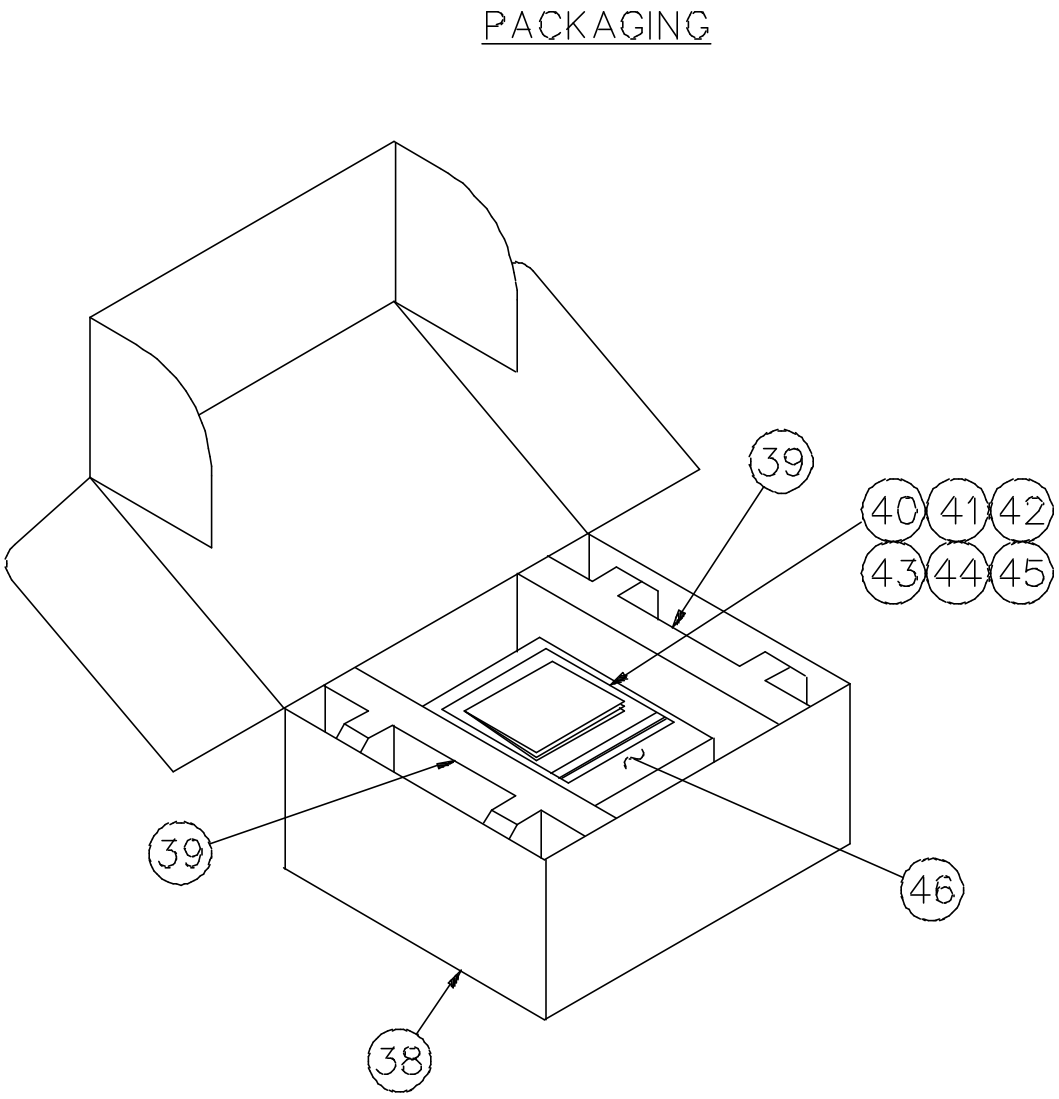

Figure E-8 Packaging Material for M450 ***internal*** *power supply version (Items needed for Shipping)*

Select model # to determine correct part numbers and quantity.

1	1	1	1	46	42-90-00911	GUSSETED POLY BAG
			1	43	28-10-31249	B,LABEL, CAPACITY-CE,GER, M450
	1	1		44	28-10-31248	B,LABEL, CAPACITY-CE,UK, M450
1	1	1	1	43	28-10-25531	A, LABEL-CAPACITY, M450/550/570
1	1	1	1	42	28-10-29064	LABEL, TARE/SETPOINT
1	1	1	1	41	39-10-28958	MODEL 450 USER'S GUIDE
1	1	1	1	40	42-90-00810	ZL8X10X2, 8X10, ZIPLOC BAG
2	2	2	2	39	42-95-29066	72196, END CAP, SHIPPING - PULP
1	1	1	1	38	42-95-28869	SHIPPING BOX, M550
2	2	2	2	37	15-10-4087	3087 HD DAVIES,M5X.8X10MM
4	4	4	4	36	31-80-0277	LO-SKID,7/16" HEX,1/16" THK
2	2	2	2	35	44-30-25506	ACTION FAB. WASHER RUBBER
1	1	1	1	34	44-25-25502	SWIVEL BRACKET
			1	33	28-10-31355	B, LABEL, RR, M4501 UNIV, STD. GER
		1		32	28-10-31353	B, LABEL, RR, M4501 UNIV, STD. UK
	1			31	28-10-31351	B, LABEL, RR, M450 UNIV, STD. UK
1				30	28-10-31179	B, LABEL, RR, M450 UNIV, STD. US
6	6	6	6	29	38-31-6218	M5x.8-18 HEX PHLPS SS INT SEM
2	2	2	2	28	38-31-29593	A, M5x.8-18 TAMP-PRF,HEX, PH2P
3	3	3	3	27	38-26-3010	M4X.7,10mm FILLIST, PHLPS, SEMS
1	1	1	1	26	07-12-25500	CUSTOM VFD MODULE
1	1	1	1	25	22-30-28949	B, CABLE, 2X5X8" RIBBON, IDC
1	1	1	1	24	22-30-25519	B, CABLE, 2X6X1.5" RIBBON, IDC
1	1	1	1	23	31-80-0175	SST1.5MM PANDUIT CABLE TIE
2	2	2	2	22	38-26-1640	M4.7, KEPS LOCK NUT-SP
3	3	3	3	21	17-20-3010	AL5083-4070-25.0-22,LYN-TRON
1	1	1	1	20	420800-30555	PCB00 -D M450 MNBRD, V3, AC PWR
5	5	5	5	19	17-40-0138	R912-05, RICHCO .25 OD X .3125 LG
1	1	1	1	18	38-26-1640	M4.7, KEPS LOCK NUT-SP
1	1	1	1	17	27-40-0100	RA863, T&B, IN5 RNG TRM #22-16
1	1	1	1	16	28-10-27115	A, IEC GROUND SYMBOL
1	1	1	1	15	31-20-0365	9779-513-4 AMPHENOL BOOT, .220
2	2	2	2	14	31-80-0239	8662-0014,3/4" SLOTTED BLK PLUG
1				13	22-30-1100	T-20310-A, LINE CORD W/GRIP
			1	12	22-30-1021	8104D, INTL CONFIG, 230VAC 10A
	1	1		11	22-30-1030	PZ0800/0/2M6, GLOBTEK, 250V 5A
1	1	1	1	10	26-20-1878	3214 HEYCO LIQUID TIGHT FTG
1	1	1	1	9	26-20-1873	3211 HEYCO LIQUID TIGHT FTG
1	1	1	1	8	44-30-30054	G, GASKET, REAR PANEL, M450, SIL.
1	1	1	1	7	44-25-28905	REAR PANEL, M450, SS
1	1	1	1	6	44-25-28904	HOUSING, M450, SS W/LOGO
10	10	10	10	5	38-26-1640	M4.7, KEPS LOCK NUT-SP
		1	1	4	420783-28617	PC783 KEYPAD ASSEMBLY M450 INT'L
1	1			3	420783-28957	PC783 KEYPAD ASSEMBLY M450
1	1	1	1	2	44-70-28768	LENS, ADHESIVE MOUNTED, M450
1	1	1	1	1	44-30-28844	GASKET, DISPLAY LENS, M450
			X	X	200450-04103	M4501 WEIGH MTR, UNIV; STD, GER
		X		X	200450-03103	M4501 WEIGH MTR, UNIV; STD, UK
	X			X	200450-03003	M450 WEIGH MTR, UNIV; STD, UK
X				X	200450-02003	M450 WEIGH MTR, UNIV; STD, USA
QTY REQ'D				ITEM NO.	PART NO.	DESCRIPTION/MATERIAL
BILL OF MATERIAL						

Table E-2 Parts Listing for M450 ***internal*** *power supply version*

E

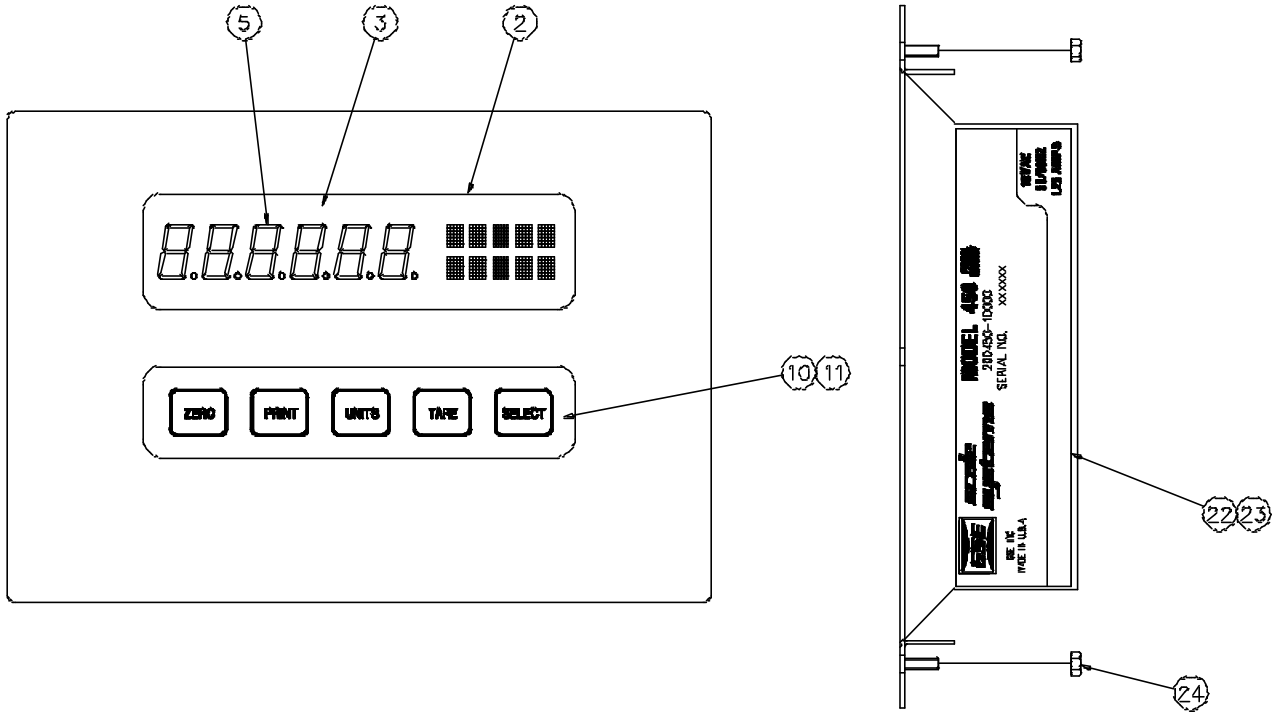

Figure E-9 Front/Side enclosure views of M450 ***panel mount*** *version* ***(external power***

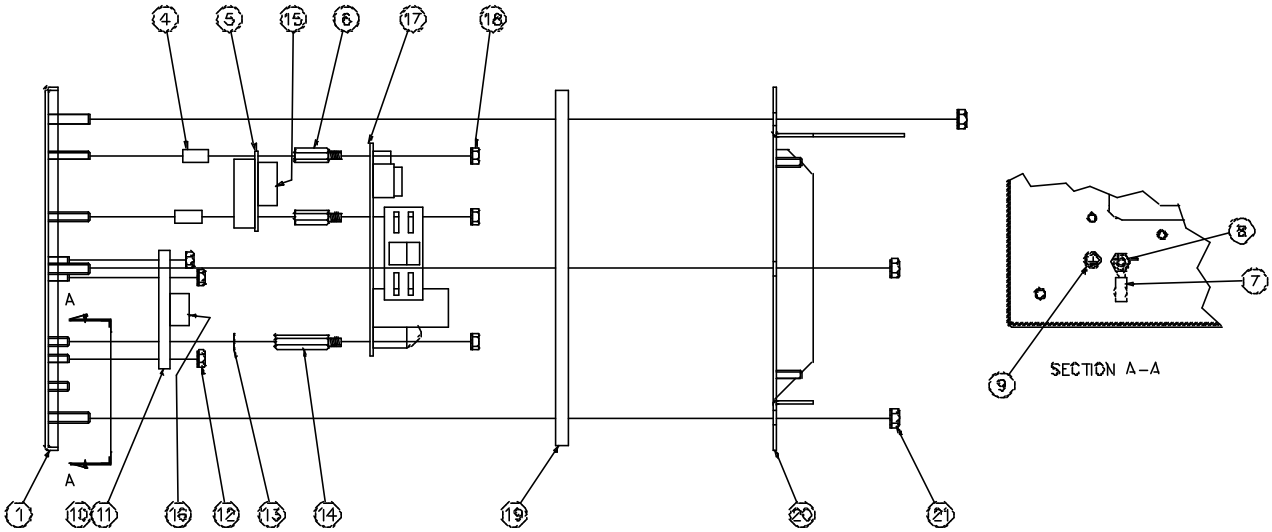

Figure E-10 Mechanical and Electrical Interconnect Views of M450 ***panel mount*** *version* ***(external power supply)***

1	1	30	28-10-29064	B,LABEL,TARE-SETPOINT/ENTRY
1	1	29	42-90-11216	1200E (12X16), 3M STATIC BAG
1	1	28	42-90-00609	6X9 2 MIL ZIPLOCK BAG PLAIN CIR
1	1	27	39-10-30856	A, MANUAL, M450/550PM INSTAL. GD
1	1	26	39-10-28956	A, MODEL 450 USER'S GUIDE
1	1	25	28-10-25531	A, LABEL-CAPACITY, M450/550/570
4	4	24	38-26-1640	M4-.7, KEPS LOCK NUT-SP
	1	23	28-10-30085	B, LABEL,S/N & FG# M450i PANEL MT
1		22	28-10-30084	B, LABEL,S/N & FG# M450 PANEL MT
8	8	21	38-31-1640	M5-.8, KEPS LOCK NUT-SP
1	1	20	44-25-30081	D,MOUNTING PLATE,M450 PANEL MT.
1	1	19	44-30-30083	C, GASKET, FRONT PANEL, M450PM
5	5	18	38-26-1640	M4-.7, KEPS LOCK NUT-SP
1	1	17	420792-29733	PC792,D, M450 MAIN BOARD, CANADA
1	1	16	22-30-28949	B, CABLE ,M450 KEYPAD,8",6 LEAD
1	1	15	22-30-31157	B, RIBBON CABLE, 2x5x9"
2	2	14	17-20-2218	AL5174-25.0-22, LYNTRON, M/F
2	2	13	38-28-1250	#8, INT-TTH-LCKWSH, ZP
8	8	12	38-26-1640	M4-.7, KEPS LOCK NUT-SP
	1	11	420783-29617	PC783 KEYPAD ASSY. M450 INT'L
1		10	420783-28937	PC783 KEYPAD ASSEMBLY M450
1	1	9	28-10-27115	A, IEC GROUND SYMBOL
1	1	8	38-26-1640	M4-.7, KEPS LOCK NUT-SP
1	1	7	27-40-0100	RA863, T&B, INS RNG TRM #22-16
3	3	6	17-20-2216	AL5174M06.0-16.0-22, LYNTRON
1	1	5	07-12-25500	CUSTOM VFD MODULE
3	3	4	17-40-0212	SPNY-058, CATAMOUNT, NYL#8x1/2
1	1	3	44-70-28756	B, LENS, ADHESIVE MOUNTED, M450
1	1	2	44-30-28844	B, GASKET, DISPLAY LENS, M450
1	1	1	44-25-30080	D, FRONT PANEL, M450 PANEL MOUNT
			200450-10002	M450i INT'L PANEL MT WEIGH METER
			200450-10001	M450 PANEL MOUNT WEIGH METER
QTY REQ'D		ITEM NO.	PART NO.	DESCRIPTION/MATERIAL
BILL OF MATERIAL				

Select model # to determine correct part numbers and quantity.

Table E-3 Parts Listing for M450 panel mount version (external power supply)

E

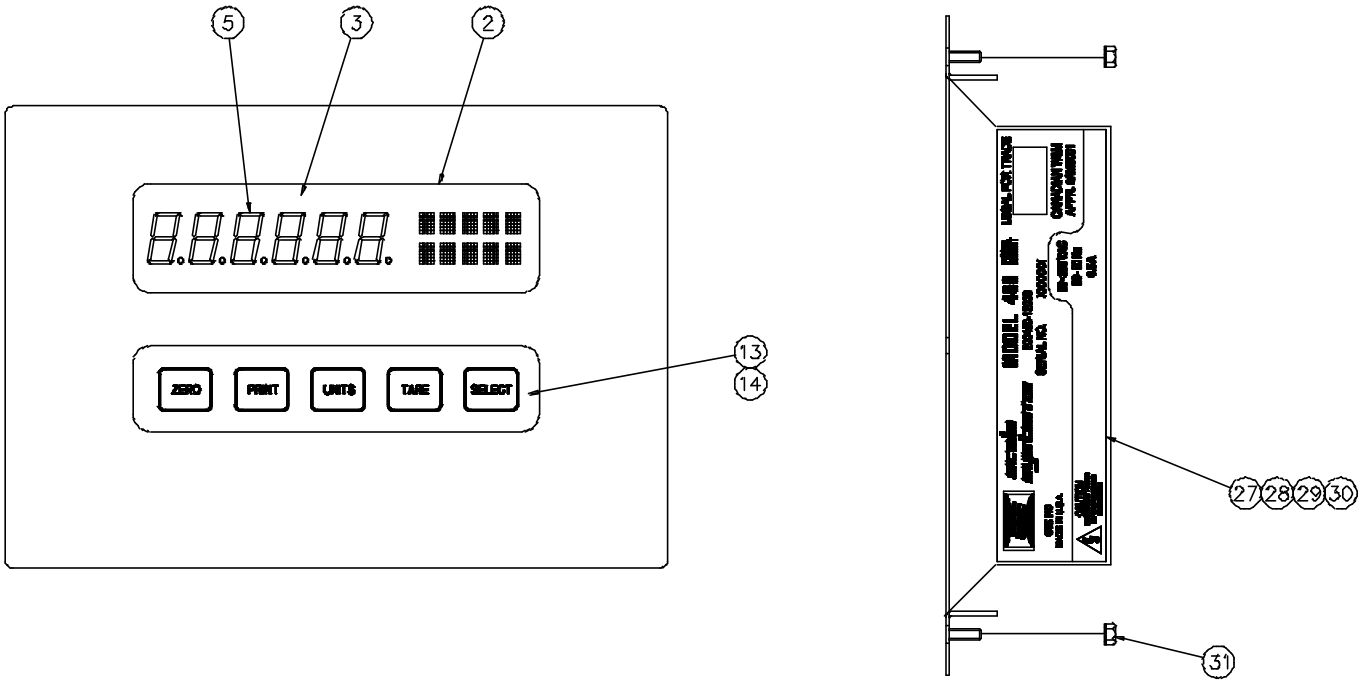

Figure E-11 Front/Side enclosure views of M450 ***panel mount*** *version* ***(internal power***

E

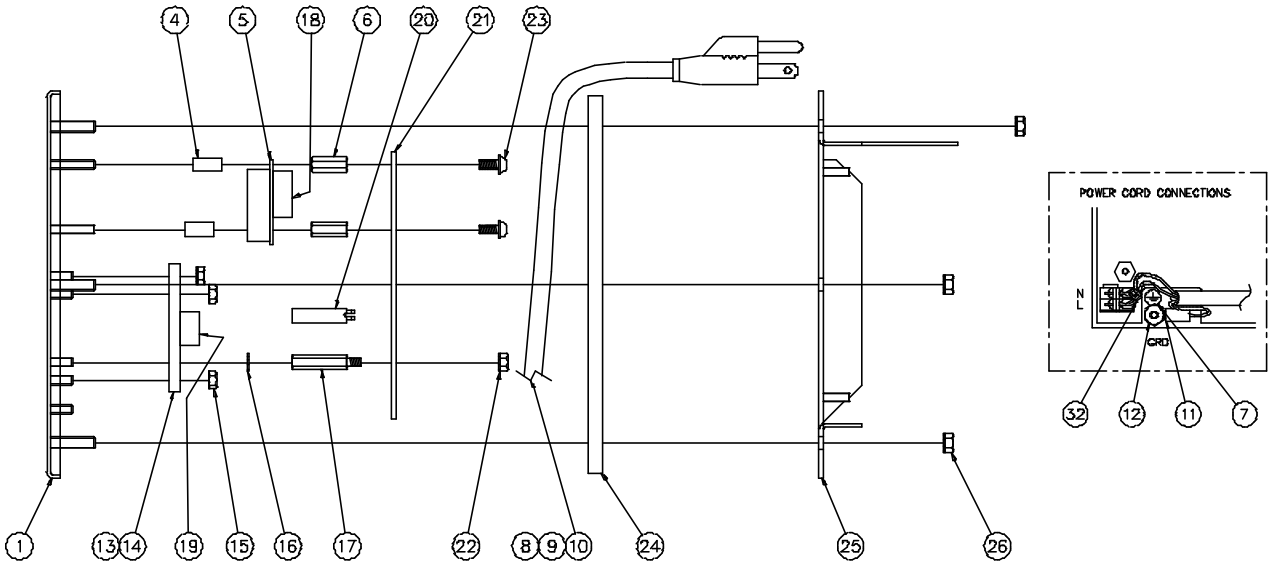

Figure E-12 Mechanical and Electrical Interconnect Views of M450 ***panel mount*** *version* ***(internal power supply)***

Select model # to determine correct part numbers and quantity.

QTY REQ'D				ITEM NO.	PART NO.	DESCRIPTION/MATERIAL
1	1	1	1	40	28-10-29064	B,LABEL,TARE-SETPOINT/ENTRY
1	1	1	1	39	42-90-11216	1200E (12X16), 3M STATIC BAG
			1	38	28-10-31249	B,LABEL, CAPACITY-CE,GER, M450
	1	1		37	28-10-31248	B,LABEL, CAPACITY-CE,UK, M450
1	1			36	28-10-25531	A, LABEL-CAPACITY, M450/550/570
1	1	1	1	35	39-10-30856	A, MANUAL, M450/550PM INSTAL. GD
1	1	1	1	34	39-10-28956	A, MODEL 450 USER'S GUIDE
1	1	1	1	33	42-90-00609	6X9 2 MIL ZIPLOCK BAG PLAIN CIR
1	1	1	1	32	31-80-0175	SST1.5MM PANDUIT CABLE TIE
4	4	4	4	31	38-26-1640	M4-.7, KEPS LOCK NUT-SP
			1	30	28-10-31359	B, LABEL, RR, M4501 UNIV, PM, GER
		1		29	28-10-31358	B, LABEL, RR, M4501 UNIV, PM, UK
	1			28	28-10-31357	B, LABEL, RR, M450 UNIV, PM, UK
1				27	28-10-31356	B, LABEL, RR, M450 UNIV, PM, US
8	8	8	8	26	38-31-1640	M5-.8, KEPS LOCK NUT-SP
1	1	1	1	25	44-25-30081	D, MOUNTING PLATE, M450 PANEL MT.
1	1	1	1	24	44-30-30083	C, GASKET, FRONT PANEL, M450PM
3	3	3	3	23	38-26-3010	M4X.7X10mm FILL. PHLPS. INSEMS Z
2	2	2	2	22	38-26-1640	M4-.7, KEPS LOCK NUT-SP
1	1	1	1	21	420800-30555	PC800 -D, M450 MNBRD, V3, AC PWR
1	1	1	1	20	17-20-0816	SRS4-16-01, RICHCO, 1" SPACER
1	1	1	1	19	22-30-28949	B, CABLE, 2X3X8", RIBBON, IDC,
1	1	1	1	18	22-30-31157	B, RIBBON CABLE, 2x5x9"
2	2	2	2	17	17-20-2225	AL5174-25.0-22, LYNTRON, M/F
2	2	2	2	16	38-28-1250	#8, INT-TTH-LCKWSH, ZP
8	8	8	8	15	38-26-1640	M4-.7, KEPS LOCK NUT-SP
		1	1	14	420783-29617	PC783 KEYPAD ASSY, M450 INT'L
1	1			13	420783-28937	PC783 KEYPAD ASSEMBLY M450
1	1	1	1	12	38-26-1640	M4-.7, KEPS LOCK NUT-SP
1	1	1	1	11	27-40-0100	RA863, T&B, INS RNG TRM #22-16
			1	10	22-30-1035	32134272M500, GLOBTEK, GER, 2.5M
	1	1		9	22-30-1030	PZ0800/0/2M5, GLOBTEK, 250V 5A
1				8	22-30-1100	T-20310-A, LINE CORD W/GRIP
1	1	1	1	7	28-10-27115	A, IEC GROUND SYMBOL
3	3	3	3	6	17-20-3005	AL5083-4070-16.0-22 F/F LYNTRON
1	1	1	1	5	07-12-25500	CUSTOM VFD MODULE
3	3	3	3	4	17-40-0212	SFNY-058, CATAMOUNT, NYL#8x1/2
1	1	1	1	3	44-70-28756	B, LENS, ADHESIVE MOUNTED, M450
1	1	1	1	2	44-30-28844	B, GASKET, DISPLAY LENS, M450
1	1	1	1	1	44-25-30080	D, FRONT PANEL, M450 PANEL MOUNT
			X	X	200450-14103	M4501 WEIGH MTR, INIV; PM, GER
		X		X	200450-13103	M4501 WEIGH MTR, INIV; PM, UK
	X			X	200450-13003	M450 WEIGH MTR, UNIV; PM, UK
X				X	200450-12003	M450 WEIGH MTR, UNIV; PM, US
BILL OF MATERIAL						

Table E-4 Parts Listing for M450 panel mount version (internal power supply)

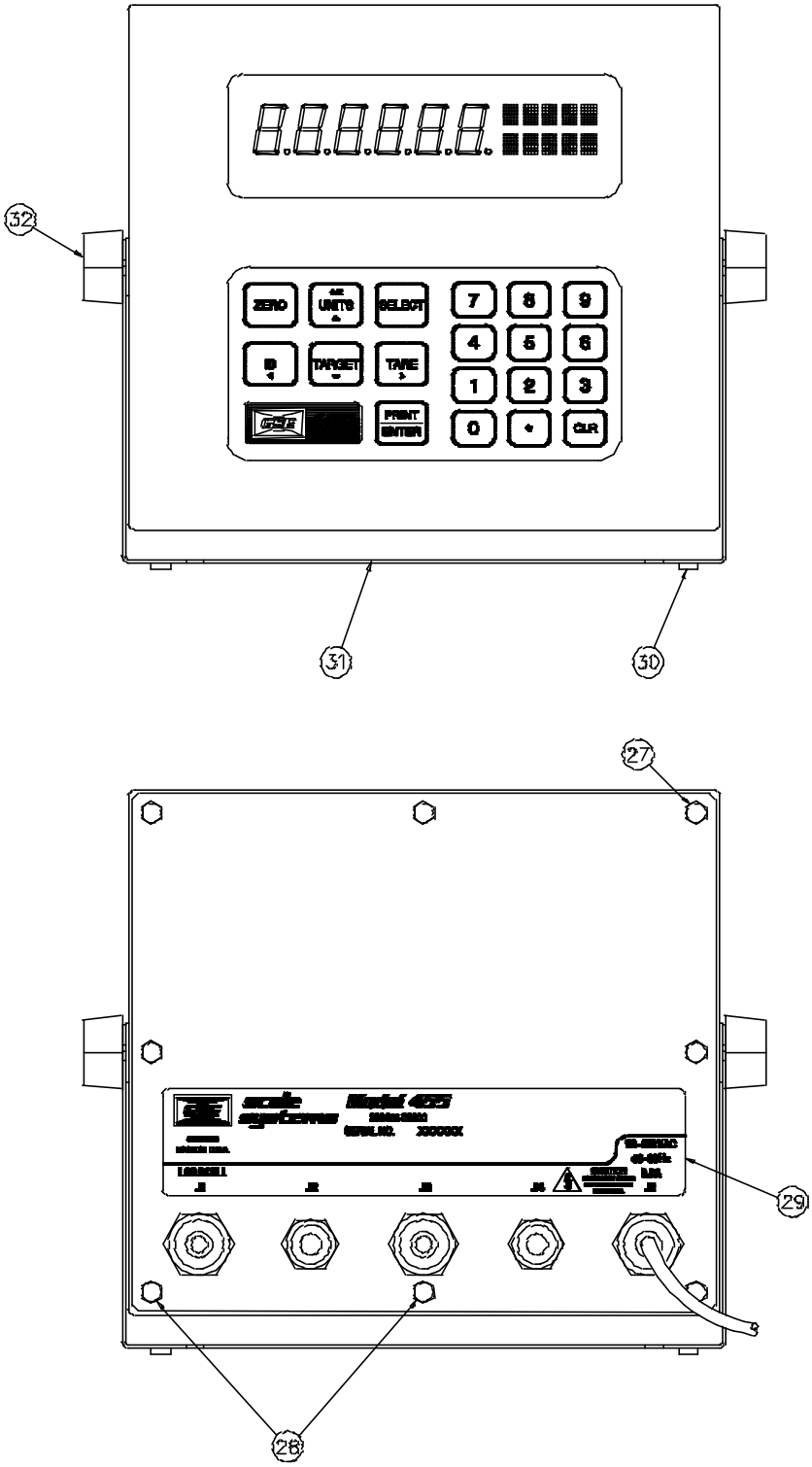

Figure E-13 Front/Rear enclosure views of ***M455 version (internal power supply)***

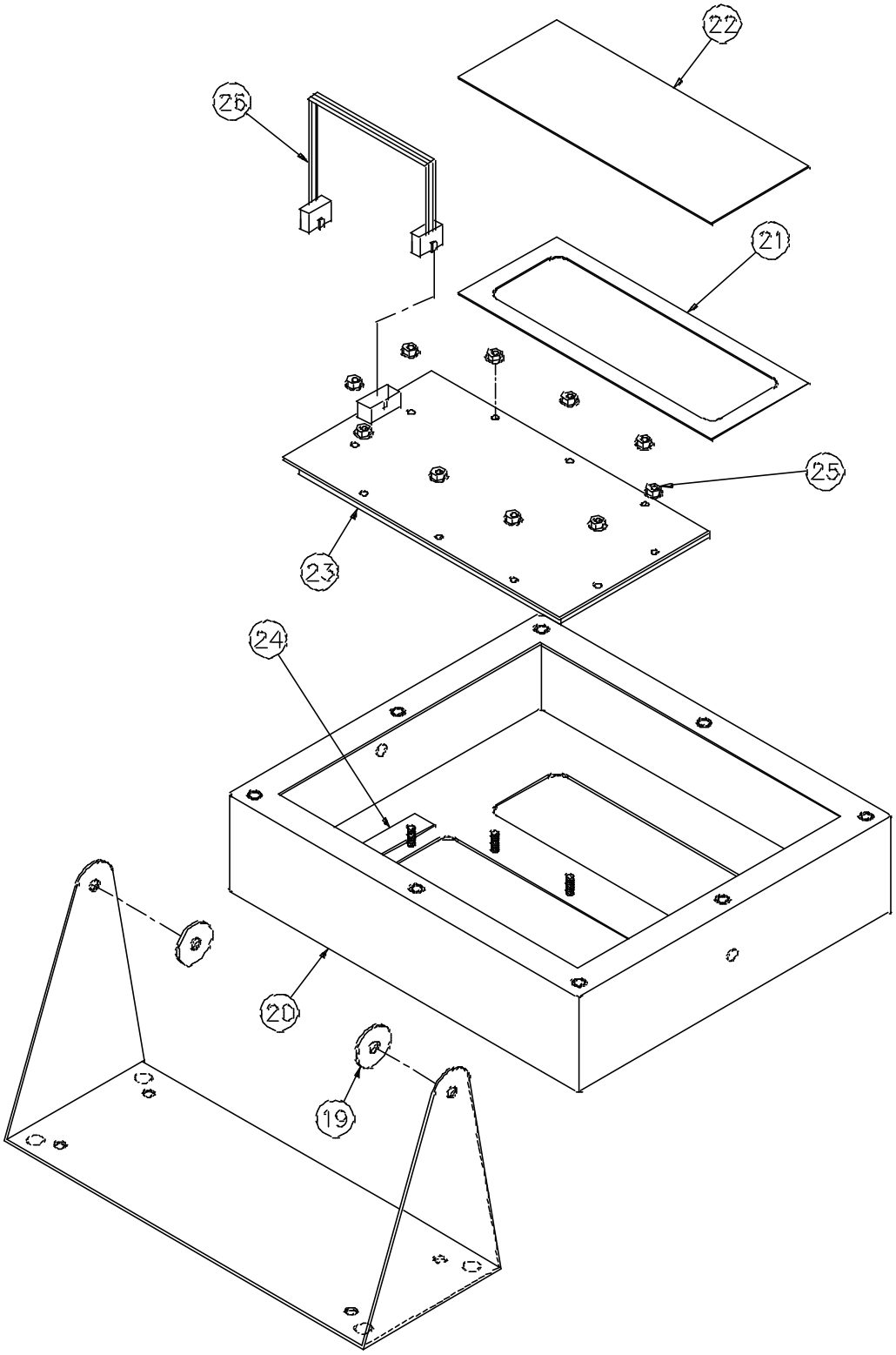

Figure E-14 Exploded View 1 of ***M455 version (internal power supply)*** *(Housing/Keypad/Lens)*

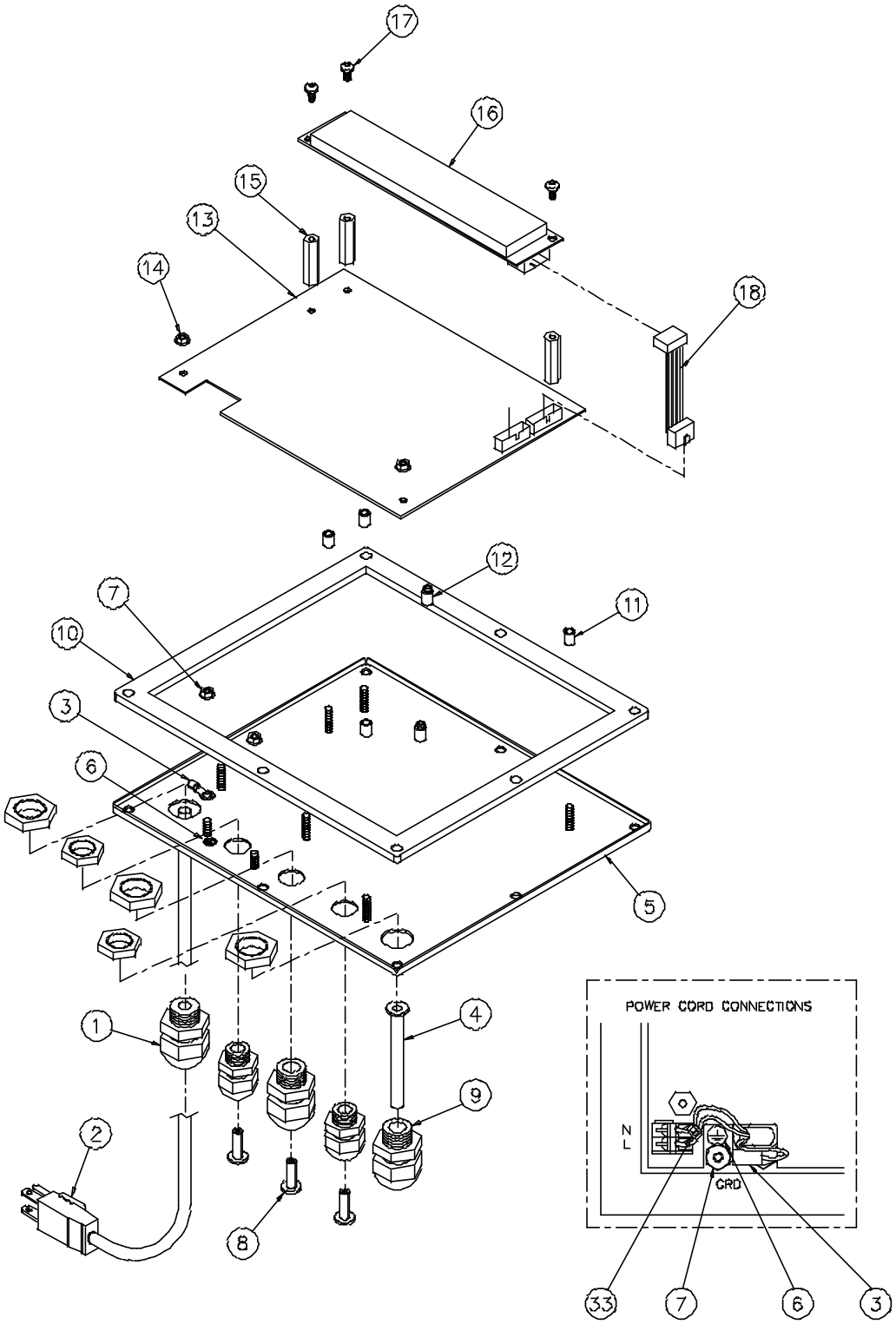

*Figure E-15 Exploded View 2 of **M455 version** (internal power supply) (Back panel/Connectors/Main Board)*

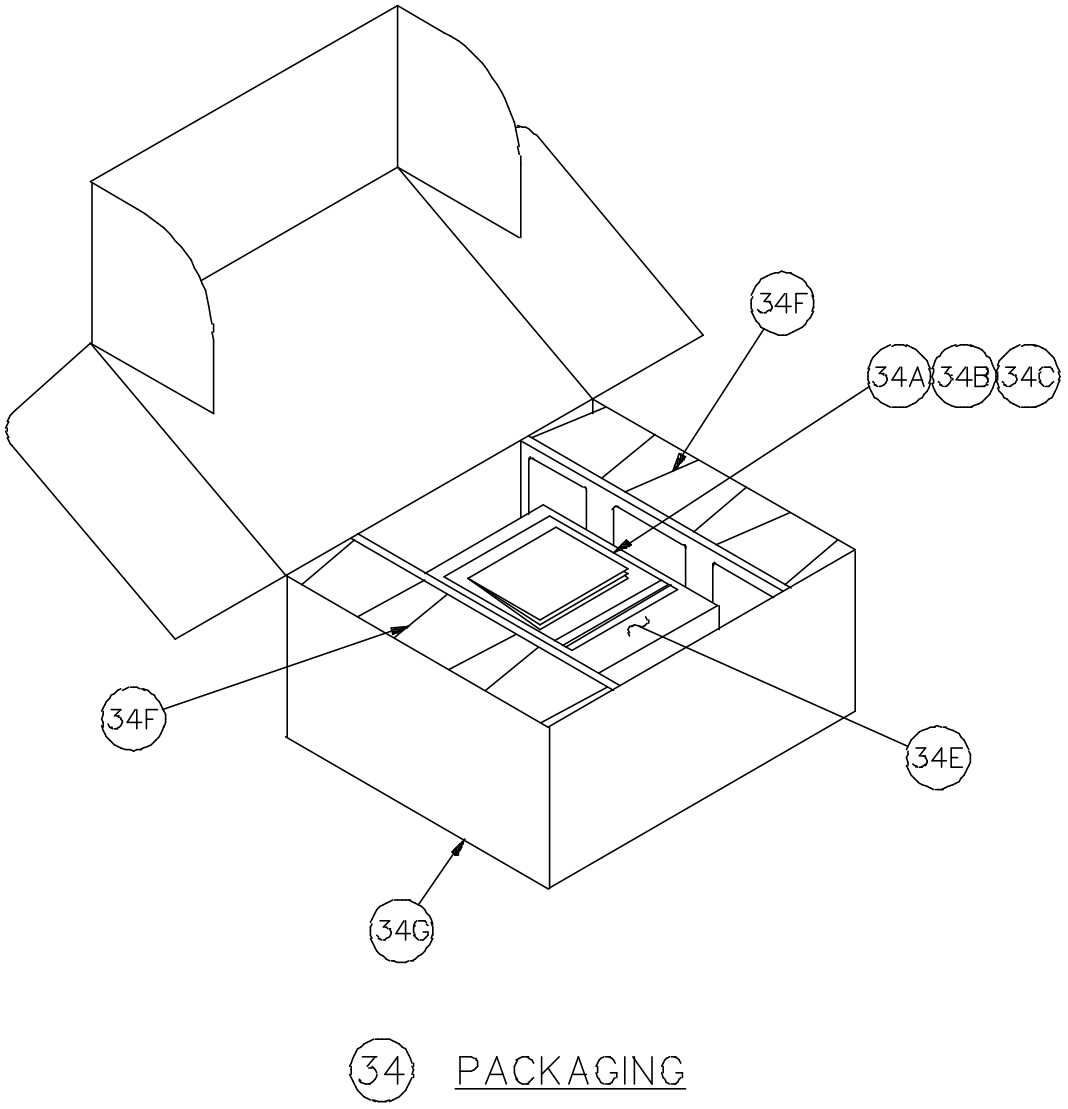

Figure E-16 Packaging Material for ***M455 version (internal power supply)*** *(Items needed for Shipping)*

1	34C	42-95-28689	T-28689-D SHIPPING BOX
2	34F	42-95-29066	72196, END CAP, SHIPPING – PULP
1	34E	42-90-00911	GUSSETED POLY BAG 10X4X15X 2
1	34D	42-90-00810	ZLBX10X2, 8X10, ZIPLOC BAG
1	34C	39-10-32312	A, USERS GUIDE, M455
3	34B	31-80-0175	SST1.5MM PANDUIT CABLE TIE
1	34A	28-10-31885	A, LABEL, CAPACITY, NTEP APP'D
1	34	200455-KIT00	M455 CUSTOMER KIT
1	33	31-80-0175	SST1.5MM PANDUIT CABLE TIE
2	32	15-10-4087	3087 HD DAVIES, M5X.8X10MM
1	31	44-25-25502	C, SWIVEL BRACKET 450/455/550/570
4	30	31-80-0277	LO-SKID, 7/16" HEX, 1/16"THK
1	29	28-10-32308	B, LABEL, RR., STD, US
2	28	38-31-29065	A, M5X.8X14MM TAMP. PRF. SS
6	27	38-31-6214	M5X.8X14MM HX/PHL-HD SEMS, SS
1	26	22-30-25520	B, CABLE, 2X5X6.5", RIBBON, IDC
10	25	38-26-1640	M4.7, KEPS LOCK NUT-SP
1	24	44-30-29069	A, INSULATOR, MAIN BOARD
1	23	420835-32245	C, KEYPAD ASSY., M455
1	22	31-70-25510	B, FILTER FOR M455 DISPLAY
1	21	44-30-25507	B, CHAMPION, GASKET M455 DISP.
1	20	44-25-25293	D, ENCLOSURE MODEL 455
2	19	44-30-25506	A, ACTION FAB. WASHER-RUBBER
1	18	22-30-25519	B, CABLE, 2X5X1.5", RIBBON, IDC
3	17	38-26-3010	M4X.7X10MM FILL, PHLPS, INSEMS Z
1	16	07-12-25500	CUSTOM VFD MODULE
3	15	17-20-3000	AL5083-4070-30.0-22 F/F M4X.7
3	14	38-26-1640	M4.7, KEPS LOCK NUT-SP
1	13	420834-32290	M455 MAIN BOARD
2	12	17-20-0705	SSRS4-5-01, RICHCO, 5/16 LG
4	11	17-40-0138	R912-05, RICHCO .25 OD X .3125LG
1	10	44-30-29986	C, GASKET, REAR PAN. M455 S/L
2	9	26-20-1873	S2109, BLK OLFLEX LIQ. TITE FIT.
3	8	31-80-0239	8662-0014, 3/4" SLOTTED BLK PLUG
1	7	36-26-1640	M4.7, KEPS LOCK NUT-SP
1	6	28-10-27115	A, GROUND SYMBOL
1	5	44-25-32186	C, REAR PANEL M455
1	4	31-20-0365	9779-513-4 AMPHENOL BOOT, .220
1	3	27-40-0100	RAB63, T&B, INS RNG TRM #22-16
1	2	22-30-1100	T-20310-A, LINE CORD W/GRIP
3	1	26-20-1876	S2111-BLK, OLFLEX LIQ. TITE FIT.
		200455-02003	M455, WEIGH MTR., STD, US
QTY REQ'D	ITEM NO.	PART NO.	DESCRIPTION/MATERIAL
BILL OF MATERIAL			

Table E-5 Parts Listing for M455 version (internal power supply)

E