BILL OF MATERIAL

SYMBOL	REQ'D	DESCRIPTION	PART NUMBER
1	1	ARM ASSEMBLY, STRONGARM	90949600A
2	2	U-CLAMP,4.5",SST	90804400A
3	4	SCREW,1/4-20NC x 3/4 HHST SST	R03649000A
4	1	ADAPTER PLATE, SWING ARM	90951100A
5	1	STIFFENER PLATE, UATA W/STRONGARM	90951400A
6	4	LOCKWASHER,1/4-SST	R0233400A
7	4	NUT,1/4-20 UNC,HEX,SST	R0361400A
8	8	WASHER,1/4-FLAT-SST	R0392400A
9	8	WASHER,M12,SST	82709900A
10	4	NUT,M12,SST	82708800A
11	4	BOLT,M12X35,SST	82739600A
12			

SEE DRAWING 90951300A FOR BOX MODIFICATIONS

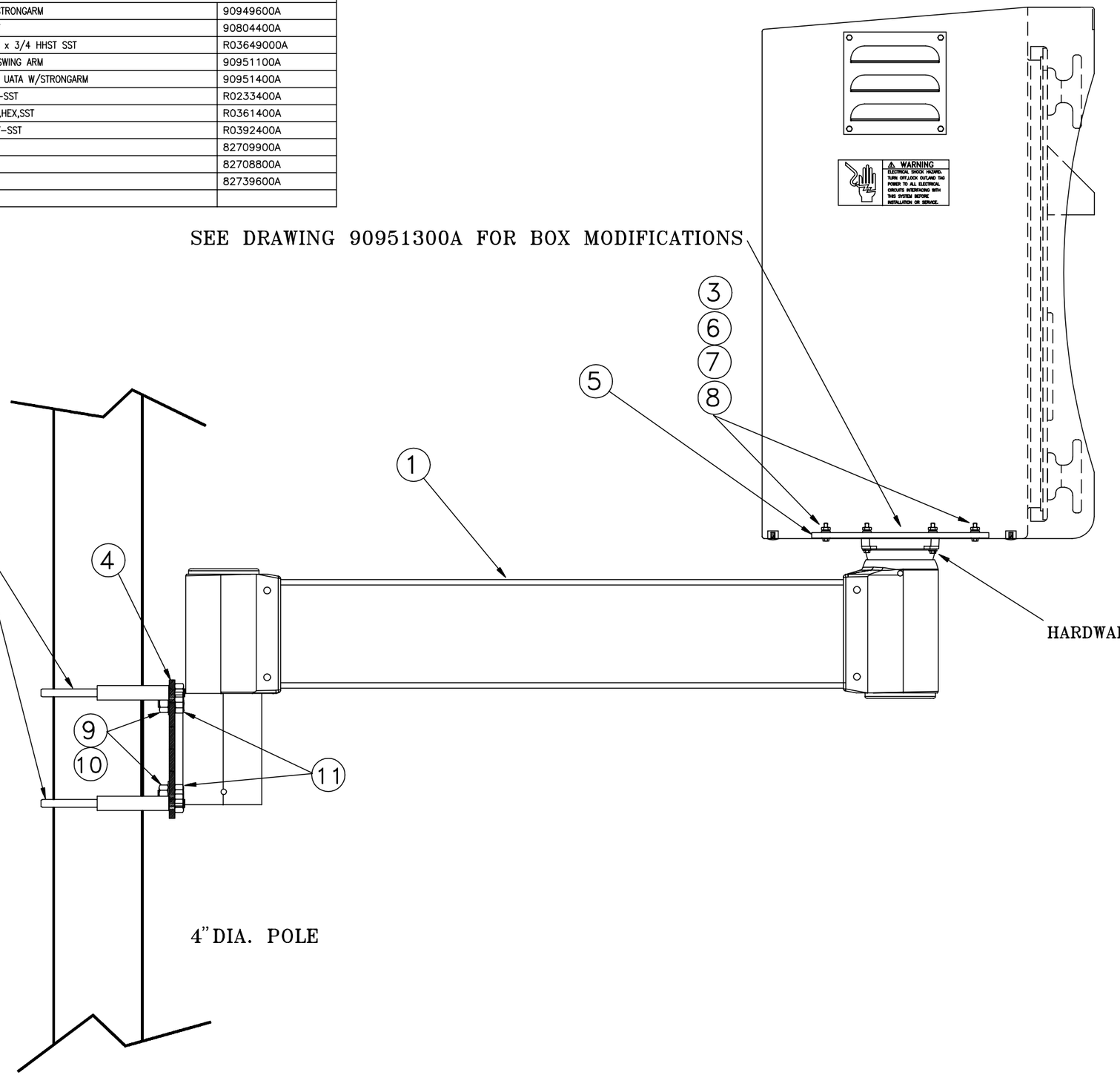

RECORD OF CHANGES

NO.	ZONE	DESCRIPTION	BY	CHK'D	APP'D	E.R. NO.	DATE

T.S. CODE

MATERIAL SPEC.
AS SHOWN

FINISH CODE

FINISH DESCRIPTION

DIMENSION TOLERANCE UNLESS OTHERWISE SPECIFIED

DECIMAL ±

FRACTIONAL ±

ANGULAR ±

DO NOT SCALE DRWG.

SCALE NONE

SUPERSEDES

SUPERSEDED BY

PROJ. NO./SPEC. NO. 5353-11

ENG. RELEASE NO.

SHEET 1 OF 1

METTLER TOLEDO

THIS PRINT IS FURNISHED WITH UNDERSTANDING THAT THE DESIGN THEREON WILL NOT BE REPRODUCED IN WHOLE OR IN PART WITHOUT WRITTEN AUTHORIZATION OF METTLER-TOLEDO, INC. ALL DESIGNS ARE THE PROPERTY OF METTLER-TOLEDO, INC. AND WILL BE PROTECTED BY PATENTS.

NAME POLE MOUNT ASSEMBLY, UNATTENDED, UADT

DWN EBW	11-OCT-04	DSGN EBW	11-OCT-04
CHKD WAG	11-OCT-04	APPD EBW	11-OCT-04

910380R