BILL OF MATERIAL

SYMBOL	REQ'D	DESCRIPTION	PART NUMBER
1	1	COVER, 12 GA, SST	91074900A
2	1	U-CLAMP, 4.5", SST	90804400A
3	2	UNISTRUT NUT, W/SPRING	90804300A
4	1	UNITSTRUT,TYPE 304 SST, 12GA, SLOTED	90804200C
5	1	CARTON, SHIPPING, 40X22X7	A16157200A
6	1	REFERENCE DRAWING	910750R

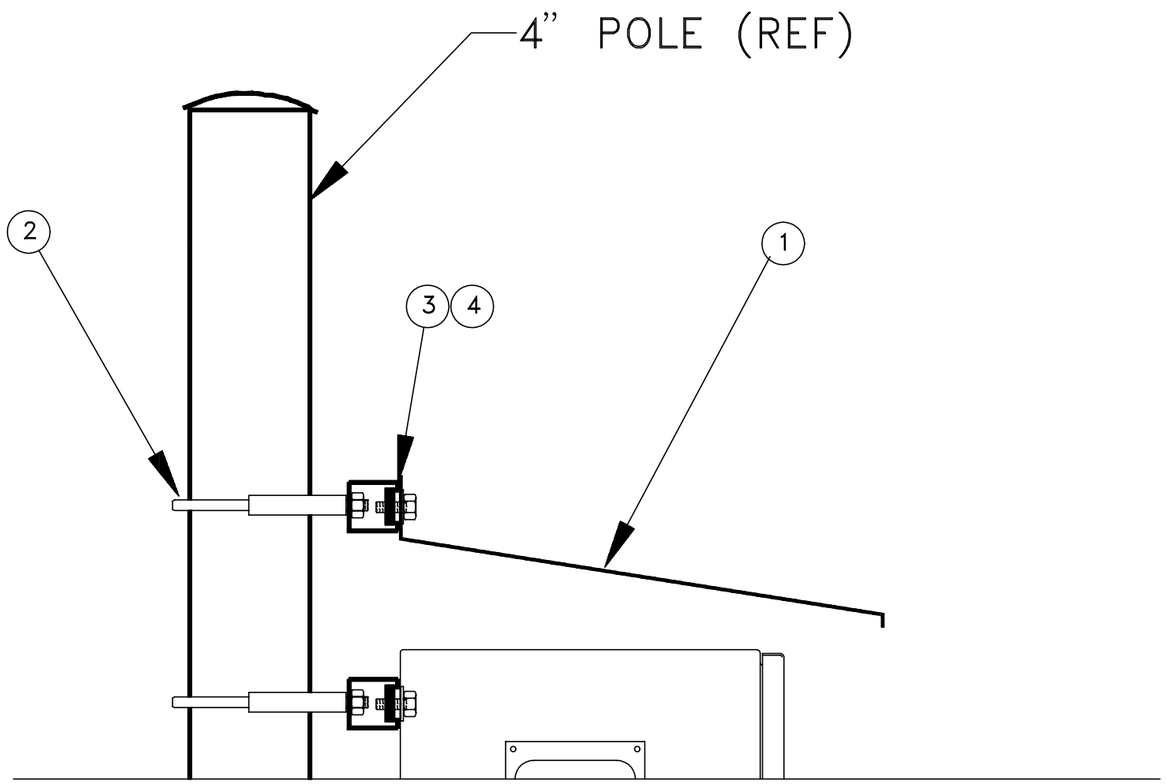

NO.	ZONE	DESCRIPTION	BY	CHK'D	APP'D	ECN. NO.	DATE

RECORD OF CHANGES

T.S. CODE

MATERIAL SPEC.
AS SHOWN

FINISH CODE

FINISH DESCRIPTION

DIMENSION TOLERANCE UNLESS OTHERWISE SPECIFIED
.XX=±.02
.XXX=±.005
DECIMAL
ANGULAR
FRACTIONAL
SCALE NO SCALE
DO NOT SCALE DRWG.
SUPERSEDES
PROJ. NO./SPEC. NO.
SUPERSEDED BY
ENG. RELEASE NO.

METTLER TOLEDO

THIS PRINT IS FURNISHED WITH UNDERSTANDING THAT THE CONTENTS THEREOF SHALL NOT BE REPRODUCED IN WHOLE OR IN PART WITHOUT WRITTEN AUTHORIZATION OF METTLER-TOLEDO, INC. ALL DESIGNS ARE THE PROPERTY OF METTLER-TOLEDO, INC. AND WILL BE PROTECTED BY PATENTS.

NAME HARSH WEATHER COVER
TRUCK TERMINAL

DRN	EBW	29-APR-05	DSGN EBW 29-APR-05
CHKD			APPD

SHEET 1 OF 1

910750R

C-PAGE (10-24-03)