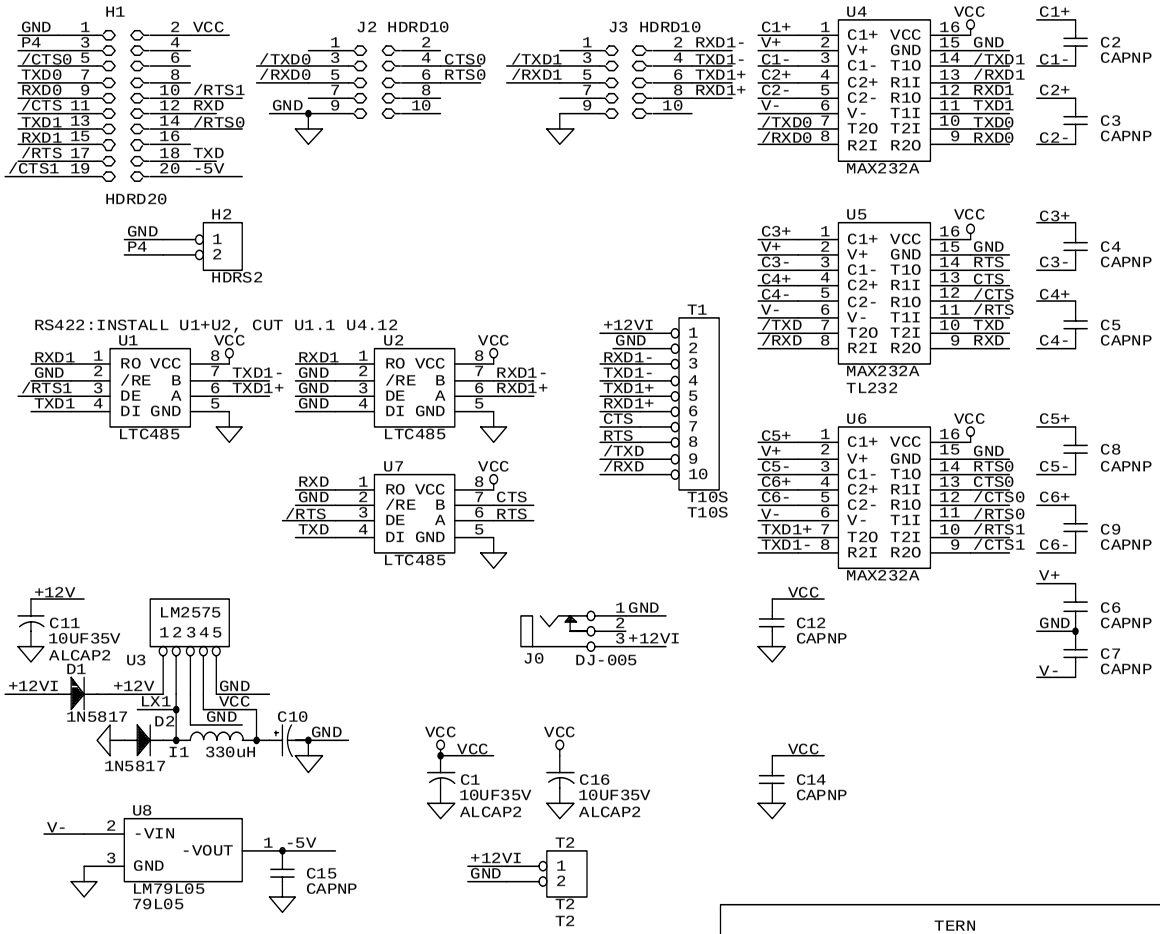

TERN		
Title 5V, RS232, RS422		
Size A	Document Number V232.SCH	REV
Date: September 24, 2003	Sheet of	