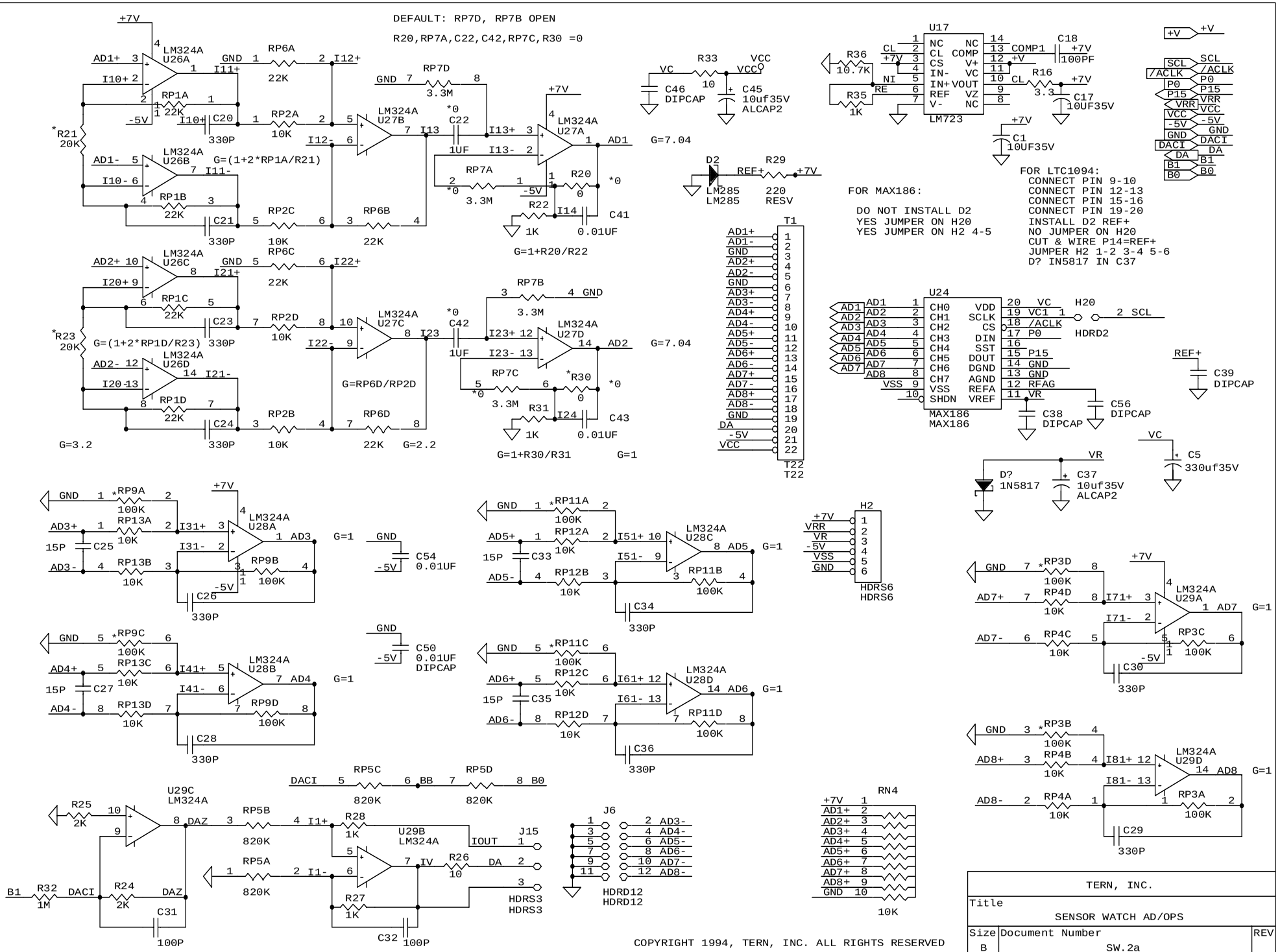

TERN, INC.		
Title	SENSOR WATCH AD/OPS	
Size B	Document Number SW.2a	REV
Date: November 20, 1994	Sheet 2 of 2	