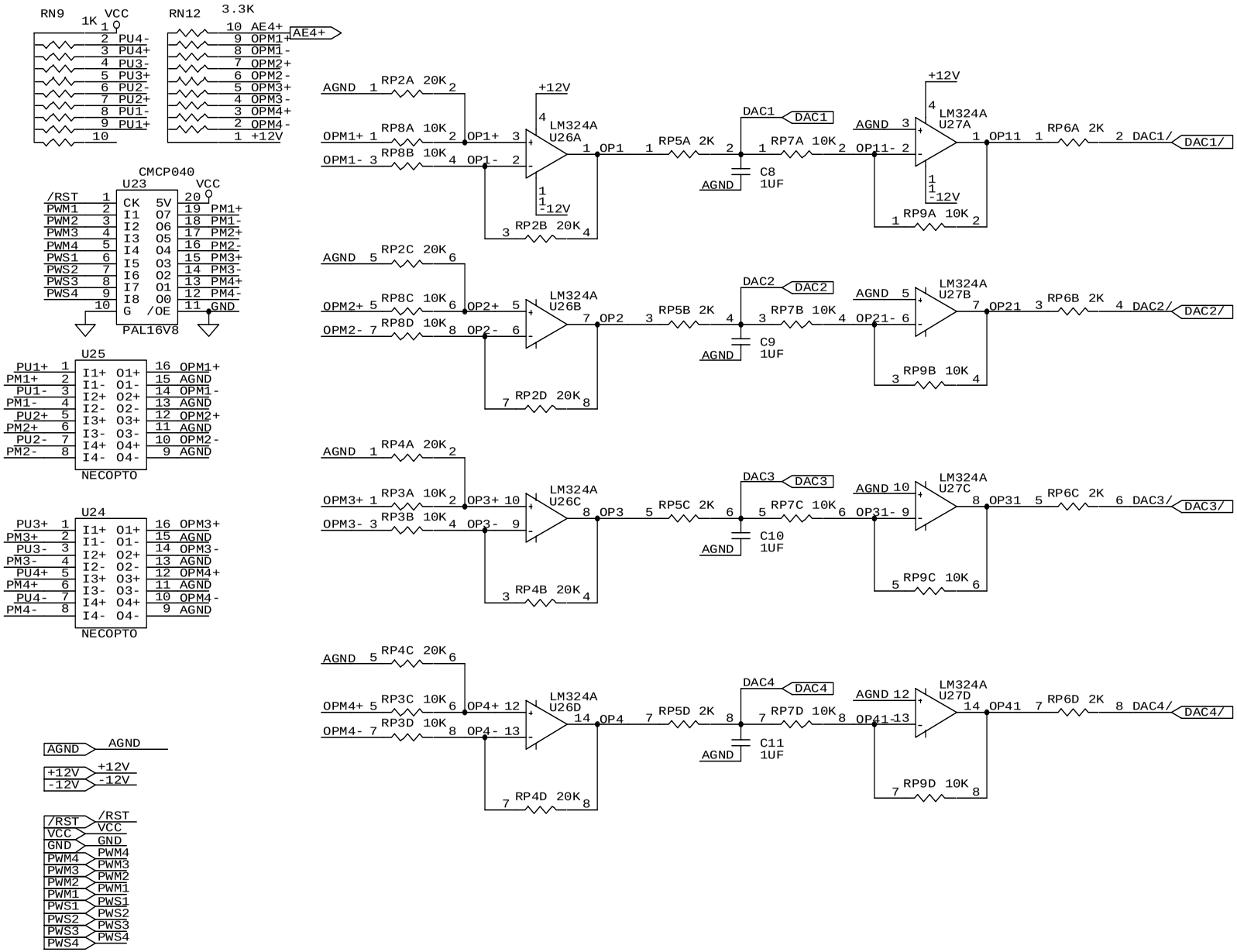

tern/STE		
Title 4-AXIS MOTION CONTROLLER DAC		
Size B	Document Number MC1451.2	REV
Date: January 17, 2000	Sheet 2 of 3	