JAGXTREME®

# PLC and Analog Output Interfaces

D14884200A
02.05.00

## COPYRIGHT

Copyright 2003 Mettler-Toledo, Inc. This documentation contains proprietary information of Mettler-Toledo, Inc. It may not be copied in whole or in part without the express written consent of Mettler-Toledo, Inc.

METTLER TOLEDO reserves the right to make refinements or changes to the product or manual without notice.

U.S. Government Restricted Rights Legend: This software is furnished with Restricted Rights. Use, duplication, or disclosure of the Software by the U.S. Government is subject to the restrictions as set forth in subparagraph (C) (1) (ii) of the Rights in Technical Data and Computer Software clause at 40 C.F.R. Sec. 252.227-7013 or in subparagraphs (c) (1) and (2) of the Commercial Computer Software-Restricted Rights clause at 40 C.F.R. Sec. 52-227-19, as applicable.


## FCC Notice

This device complies with Part 15 of the FCC Rules and the Radio Interference Requirements of the Canadian Department of Communications. Operation is subject to the following conditions: (1) this device may not cause harmful interference, and (2) this device must accept any interference received, including interference that may cause undesired operation.

This equipment has been tested and found to comply with the limits for a Class A digital device, pursuant to Part 15 of FCC Rules. These limits are designed to provide reasonable protection against harmful interference when the equipment is operated in a commercial environment. This equipment generates, uses, and can radiate radio frequency energy and, if not installed and used in accordance with the instruction manual, may cause harmful interference to radio communications. Operation of this equipment in a residential area is likely to cause harmful interference in which case the user will be required to correct the interference at his or her own expense.

## ORDERING INFORMATION

It is most important that the correct part number is used when ordering parts. Parts orders are machine processed, using only the part number and quantity as shown on the order. Orders are not edited to determine if the part number and description agree.


## TRADEMARKS

METTLER TOLEDO®, JAGUAR®, JAGXTREME® and DigiTOL® are registered trademarks of Mettler-Toledo, Inc. All other brand or product names are trademarks or registered trademarks of their respective companies.

# CUSTOMER FEEDBACK

Your feedback is important to us! If you have a problem with this product or its documentation, or a suggestion on how we can serve you better, please fill out and send this form to us. Or, send your feedback via email to: quality_feedback.mtwt@mt.com. If you are in the United States, you can mail this postpaid form to the address on the reverse side or fax it to (614) 438-4355. If you are outside the United States, please apply the appropriate amount of postage before mailing.

| | |
|---|---|
| Your Name: | Date: |
| Organization Name: | METTLER TOLEDO Order Number: |
| Address: | Part / Product Name: |
| | Part / Model Number: |
| | Serial Number: |
| | Company Name for Installation: |
| Phone Number: ( ) Fax Number: ( ) | Contact Name: |
| E-mail Address: | Phone Number: |

| | Please check the appropriate box to indicate how well this product met your expectations in its intended use? |
|---|---|
| | Met and exceeded my needs |
| | Met all needs |
| | Met most needs |
| | Met some needs |
| | Did not meet my needs |

| Comments/Questions: |
|---|
| |
| |
| |
| |
| |
| |
| |
| |
| |

## DO NOT WRITE IN SPACE BELOW; FOR METTLER TOLEDO USE ONLY

☐ Retail ☐ Light Industrial ☐ Heavy Industrial ☐ Custom

**RESPONSE**: Include Root Cause Analysis and Corrective Action Taken.

B12745800A

# DECLARATION OF CONFORMITY

Konformitätserklärung
Déclaration de conformité
Declaración de Conformidad
Conformiteitsverklaring
Dichiarazione di conformità

**We**/Wir/Nous/Wij/Noi: **Mettler-Toledo, Inc.**
**1150 Dearborn Drive**
**Worthington, Ohio 43085**
**USA**

**declare under our sole responsibility that the product,**
erklären, in alleiniger Verantwortung, daß dieses Produkt,
déclarons sous notre seule responsabilité que le produit,
declaramos, bajo nuestra sola responsabilidad, que el producto,
verklaren onder onze verantwoordelijkheid, dat het product,
dichiariamo sotto nostra unica responsabilitá, che il prodotto,

**Model/Type:** **Jaguar and JagXtreme**

**to which this declaration relates is in conformity with the following standard(s) or other normative document(s).**
auf das sich diese Erklärung bezieht, mitder/den folgenden Norm(en) oder Richtlinie(n) übereinstimmt.
Auquel se réfère cette déclaration est conforme à la (aux) norme(s) ou au(x) document(s) normatif(s).
Al que se refiere esta declaración es conforme a la(s) norma(s) u otro(s) documento(s) normativo(s).
Waarnaar deze verklaring verwijst, aan de volende norm(en) of richtlijn(en) beantwoordt.
A cui si riferisce questa dichiarazione è conforme alla/e sequente/i norma/e o documento/i normativo/i.

| **Council directive on the harmonization of the laws of the Member states:** | **standards:** | **Certificate number (if applicable)** |
|---|---|---|
| relating to non-automatic weighing instruments (90/384/EEC) amended by directive (93/68/EEC) | EN 45501:1992<br>Article 1.2.a | TC 2618 |
| relating to electromagnetic compatibility (89/336/EEC) amended by directive (93/68/EEC; 92/31/EEC) | EN 55022, B | |
| relating to electrical equipment designed for use within certain voltage limits (73/23/EEC amended by directive (93/68/EEC) | EN 60950 | |
| Relating to electrical equipment designed for use in potentially explosive atmospheres (94/9/EC) (Refer to note 1) | EN 50021 : 1999<br>EN 50281-1-1 : 1998 | KEMA 02ATEX1023 X<br>(Refer to note 1) |
| | | |

**Worthington, Ohio USA,** **April, 2003** **Mettler-Toledo, Inc.**

Darrell Flocken, Manager - Weights & Measures
Office of Weights and Measures

Notes:

1. Certificate KEMA 02ATEX1023 X applies only to JagXtreme units only. Refer to Section (17) of the certificate for special conditions.

Original issue: July, 1995
Revised: October, 1996 added compliance to Low Voltage Directive
May, 2000 added JagXtreme
April, 2003 added compliance to ATEX Directive.

# PRECAUTIONS

READ this manual BEFORE operating or servicing this equipment.

FOLLOW these instructions carefully.

SAVE this manual for future reference.

DO NOT allow untrained personnel to operate, clean, inspect, maintain, service, or tamper with this equipment.

ALWAYS DISCONNECT this equipment from the power source before cleaning or performing maintenance.

CALL METTLER TOLEDO for parts, information, and service.

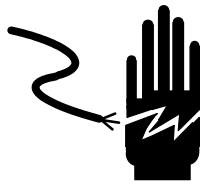

**WARNING**

ONLY PERMIT QUALIFIED PERSONNEL TO SERVICE THIS EQUIPMENT. EXERCISE CARE WHEN MAKING CHECKS, TESTS AND ADJUSTMENTS THAT MUST BE MADE WITH POWER ON. FAILING TO OBSERVE THESE PRECAUTIONS CAN RESULT IN BODILY HARM.

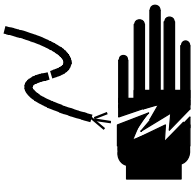

**WARNING**

FOR CONTINUED PROTECTION AGAINST SHOCK HAZARD CONNECT TO PROPERLY GROUNDED OUTLET ONLY. DO NOT REMOVE THE GROUND PRONG.

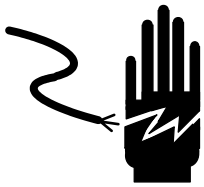

**WARNING**

DISCONNECT ALL POWER TO THIS UNIT BEFORE REMOVING THE FUSE OR SERVICING.

**CAUTION**

BEFORE CONNECTING/DISCONNECTING ANY INTERNAL ELECTRONIC COMPONENTS OR INTERCONNECTING WIRING BETWEEN ELECTRONIC EQUIPMENT ALWAYS REMOVE POWER AND WAIT AT LEAST THIRTY (30) SECONDS BEFORE ANY CONNECTIONS OR DISCONNECTIONS ARE MADE. FAILURE TO OBSERVE THESE PRECAUTIONS COULD RESULT IN DAMAGE TO OR DESTRUCTION OF THE EQUIPMENT OR BODILY HARM.

**CAUTION**

OBSERVE PRECAUTIONS FOR HANDLING ELECTROSTATIC SENSITIVE DEVICES.

NO POSTAGE NECESSARY IF MAILED IN THE UNITED STATES

# BUSINESS REPLY MAIL

FIRST CLASS PERMIT NO. 414
COLUMBUS, OH

*POSTAGE WILL BE PAID BY ADDRESSEE*

Mettler-Toledo, Inc.
Quality Manager - MTWT
P.O. Box 1705
Columbus, OH 43216
USA

*Please seal with tape.*

# CONTENTS


1 Allen-Bradley RIO Option Card ..... 1-1

Overview ..... 1-1
Data Definition ..... 1-3
Hardware Setup ..... 1-21
Software Setup ..... 1-21
Troubleshooting ..... 1-23
Allen-Bradley RIO PCB Parts ..... 1-24
Interfacing Examples ..... 1-25

2 PROFIBUS ..... 2-1

Overview ..... 2-1
Data Definition ..... 2-6
Floating Point Numbers ..... 2-20
Hardware Setup ..... 2-25
Software Setup ..... 2-25
Troubleshooting ..... 2-27
PROFIBUS PCB Parts ..... 2-28
Siemens Simatic S5 Setup Example ..... 2-29
TI545 Setup Example ..... 2-31
Sample Conversion of IEEE Floating Point Format into Siemens S5 Floating Point Format ..... 2-33

3 Dual Analog Output Option Card ..... 3-1

JAGXTREME Terminal Dual Analog Output PCB ..... 3-1
Specifications ..... 3-1
Installation ..... 3-2
Setup In the JAGXTREME Terminal ..... 3-3
Wiring ..... 3-4
Dual Analog Output PCB Parts ..... 3-5

4 Modbus Plus Option Card ..... 4-1

Overview ..... 4-1
Data Definition ..... 4-5
Hardware Setup ..... 4-25
Troubleshooting ..... 4-28
Modbus Plus PCB Parts ..... 4-29
Modicon 984-385E Setup Example ..... 4-30
Quantum 242 02 PLC with NOM 211 00 Module ..... 4-35

5 Appendix ..... 5-1

PLC Custom Interface ..... 5-1
JagBASIC to Analog Output Shared Data Interface ..... 5-2

For your notes

# 1 Allen-Bradley RIO Option Card

## Overview

Refer to the Allen-Bradley documentation or Allen-Bradley directly for questions related to the A-B RIO network such as cable length, number of nodes, and PLC model compatibility. This manual does not attempt to provide all information pertaining to the Allen-Bradley RIO.

The Allen-Bradley RIO option card enables the JAGXTREME terminal to communicate to Allen-Bradley Programmable Logic Controllers (PLCs) through direct connection to the A-B RIO network. The option consists of a backplane-compatible I/O module and software that resides in the JAGXTREME terminal, which implements the data exchange.

The A-B RIO option has the following features:

- A-B RIO Node Adapter Chip Set (licensed from Allen-Bradley) and termination for the A-B network cable (blue hose) on a three-position removable terminal block.
- User programmable RIO communication parameters are configured in software set up through the terminal keyboard/display. The parameters are as follows:
  - 57.6K, 115.2K, or 230.4K baud rate
  - 1/4, 1/2, 3/4, full rack (depends upon the number of scales/interface)
  - rack address
  - starting quarter
  - last rack designation
- Capability for bi-directional discrete mode communications of weight, display increments, status, and control data between the PLC and the terminal.
- Capability for bi-directional block transfer communication of many JAGXTREME terminal data variables. The option also allows the PLC to write messages to the terminal's lower display area.

## Communications

Information on data exchange to and from the Allen-Bradley RIO and data formats are not made available by Allen-Bradley.
JAGXTREME terminals on A-B RIO:
Use Allen-Bradley licensed technology.
Look like an A-B RIO device.
Use standard blue hose connections.

The JAGXTREME terminal utilizes component parts that are provided by Allen-Bradley to assure complete compatibility with the Allen-Bradley RIO network. A JAGXTREME terminal is recognized as an Allen-Bradley device by the PLC.

Each option connected to the Allen-Bradley RIO network represents a physical node. The connection is facilitated by a three-position removable terminal block on the option card back panel. The terminal block is labeled 1, SHLD, and 2. These terminals correspond to the terminals on the A-B PLC RIO connector. The wiring between the PLC and the RIO connector uses the standard RIO cable used by Allen-Bradley. This cable is often referred to as the "blue hose." The cable installation procedures and specification including distance and termination requirements are the same as recommended by Allen-Bradley for the RIO network.

## Node/Rack Address

Although each RIO option represents one physical node, the addressing of the node is defined as a logical rack address. This address is chosen by the system designer, then programmed into the terminal and PLC. The JAGXTREME terminal's address is programmed through the Configure Options program block in the setup menu.

The terminal's setup capabilities allow selection of the logical rack address, starting quarter, and designation of the last rack. More than one rack quarter must be used if the terminal's RIO option is configured to interface with more than one scale, floating point data, or the optional block transfer data. Since up to four scales may be configured to interface with one RIO option, it will occupy four quarters (a full rack). The quarters must be contiguous in a single, logical rack, so the starting quarter must be low enough to accommodate all of the data for the scales in a single, logical rack. The terminal will determine the number of quarters needed for the number of configured scales and chosen data format. It only allows selection of the possible starting quarters.

## Data Formats

The A-B RIO option card has two types of data exchanges: discrete data and block transfer data.

Discrete data is continuously available for each of the configured scales. Each scale selected to pass data through the RIO option has its own logical rack address to send and receive information to and from the PLC. Discrete data for each scale is always sent even when the optional block transfer data is used.

Block transfer data is available when the option is enabled through the terminal's setup menu. This data is used to pass information that cannot be sent by the discrete data because of size or process speed limitations. See the Data Definition section for more information.

## Remote Scale Sharing

Using Ethernet, it is possible for terminals to communicate with other terminals and to share resources. This allows a terminal with the RIO option to collect information from up to four networked and local scales when using discrete integer, division, or extended integer data. If floating point data is used, two scales may share the RIO option. If block transfer data is used, no networked scales may be used but up to two local scales may share the RIO option no matter what type of discrete data format is selected. The following charts show possible configurations with and without resource sharing.

## Possible Configurations for JAGXTREME to A-B PLC Systems

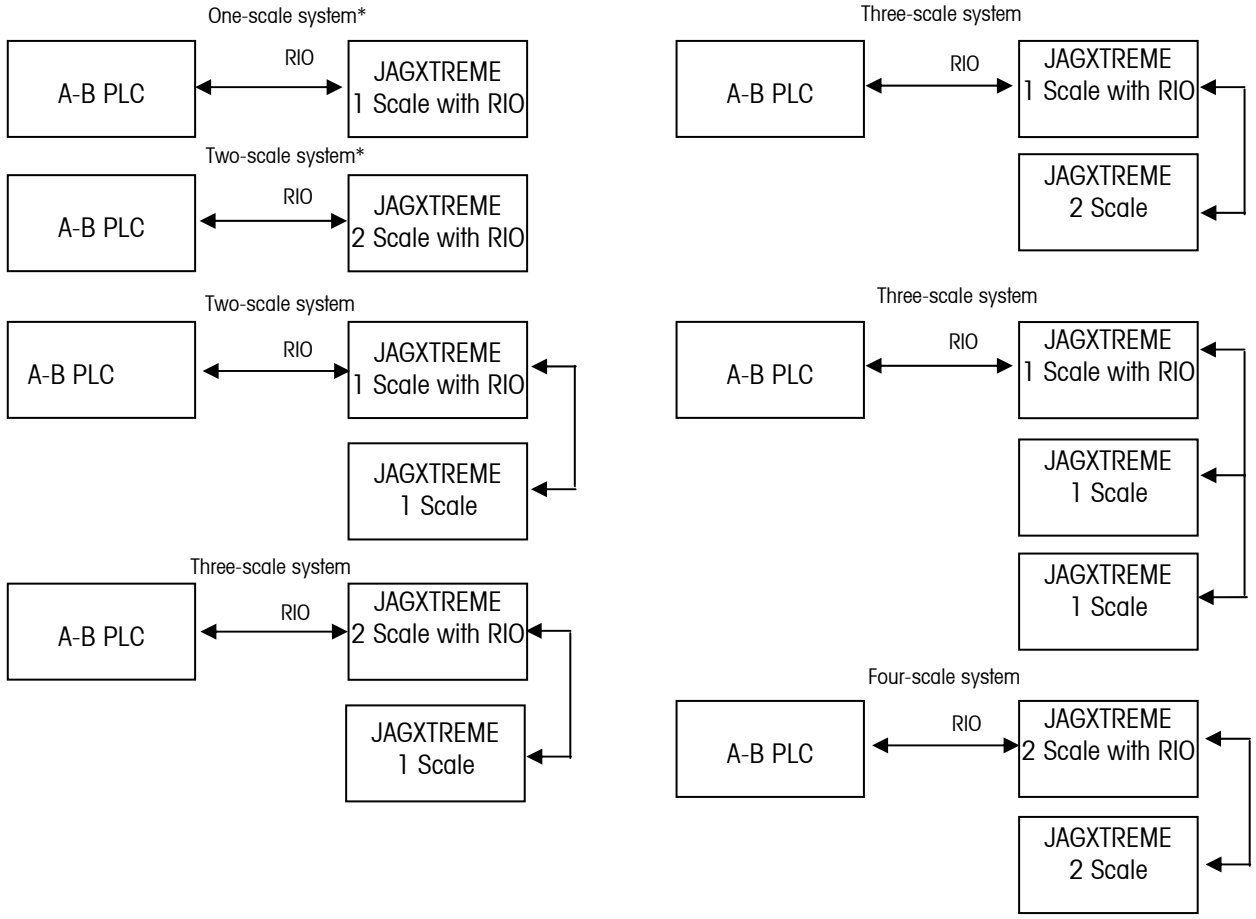


## Possible Configurations for JAGXTREME to A-B PLC Systems

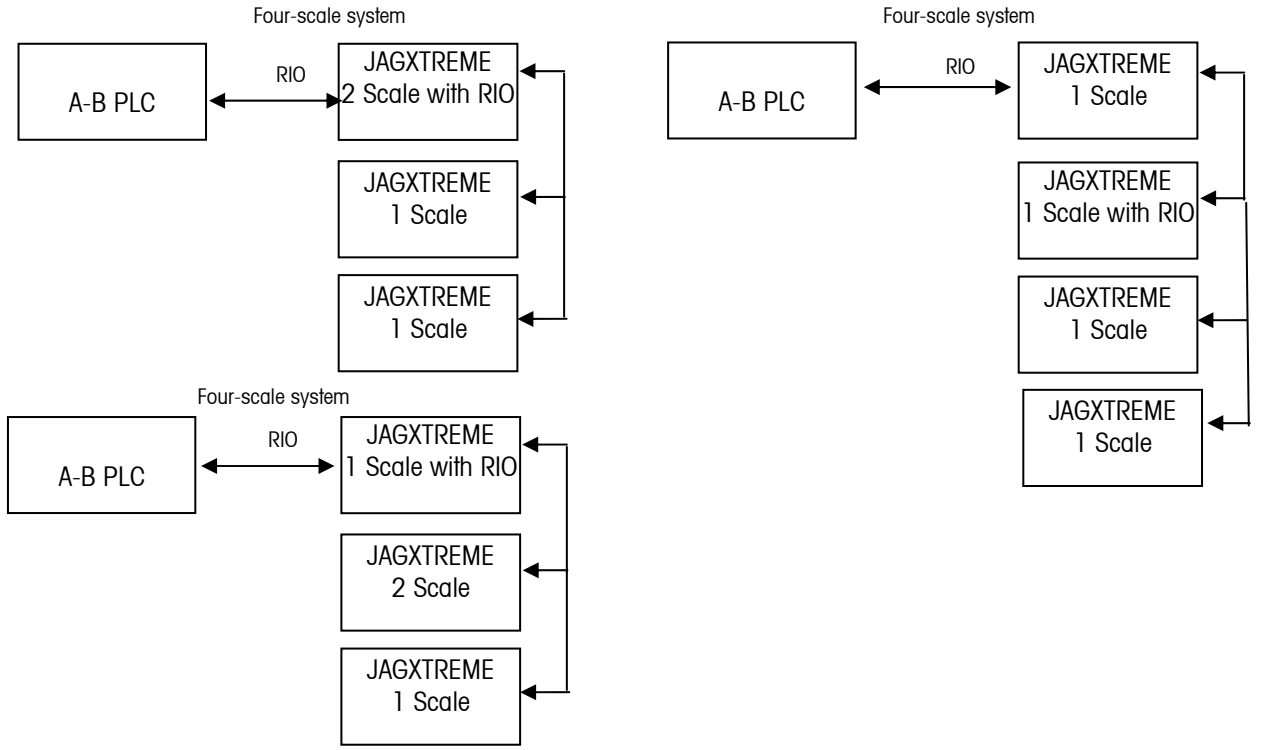

No Shared Resources

## Possible Configurations for JAGXTREME to A-B PLC Systems

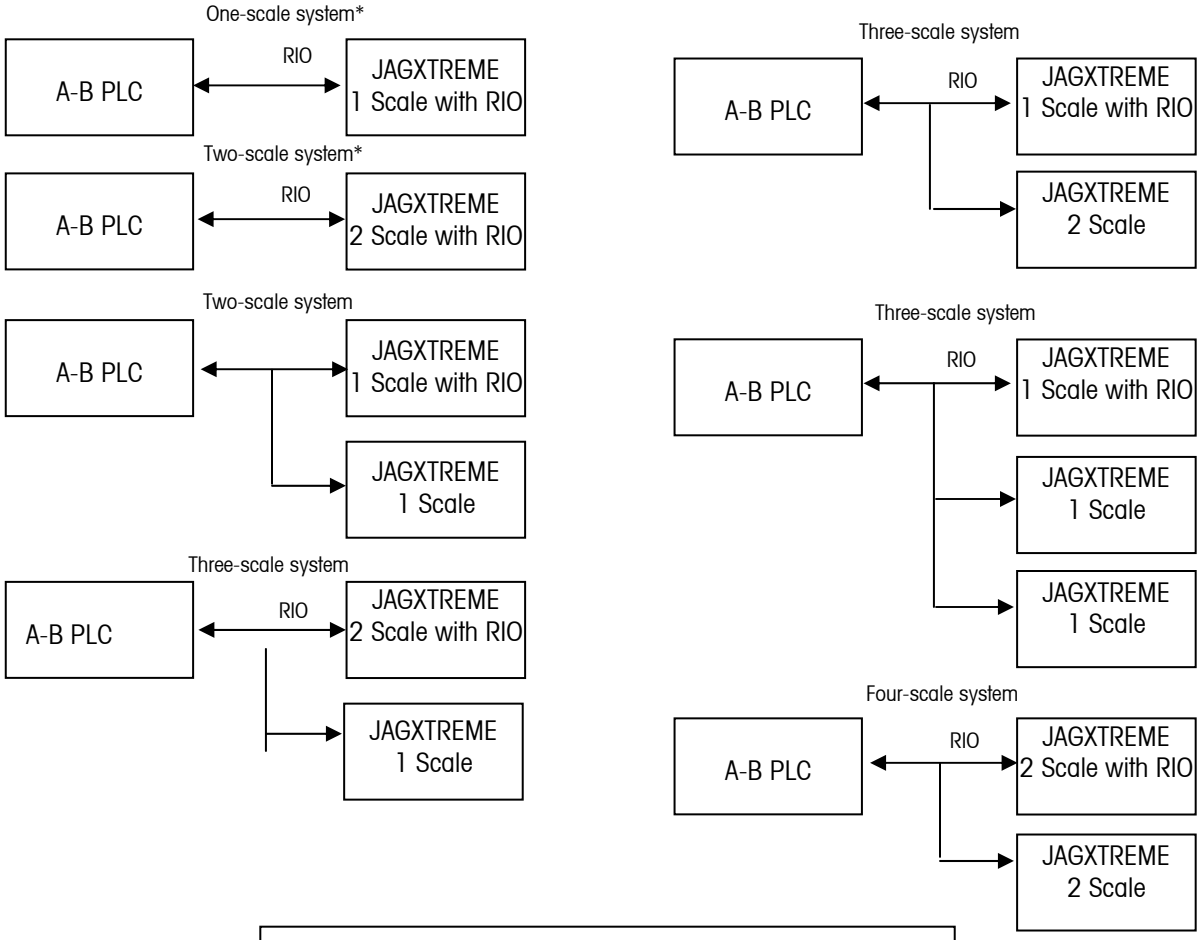


## Possible Configurations for JAGXTREME to A-B PLC Systems

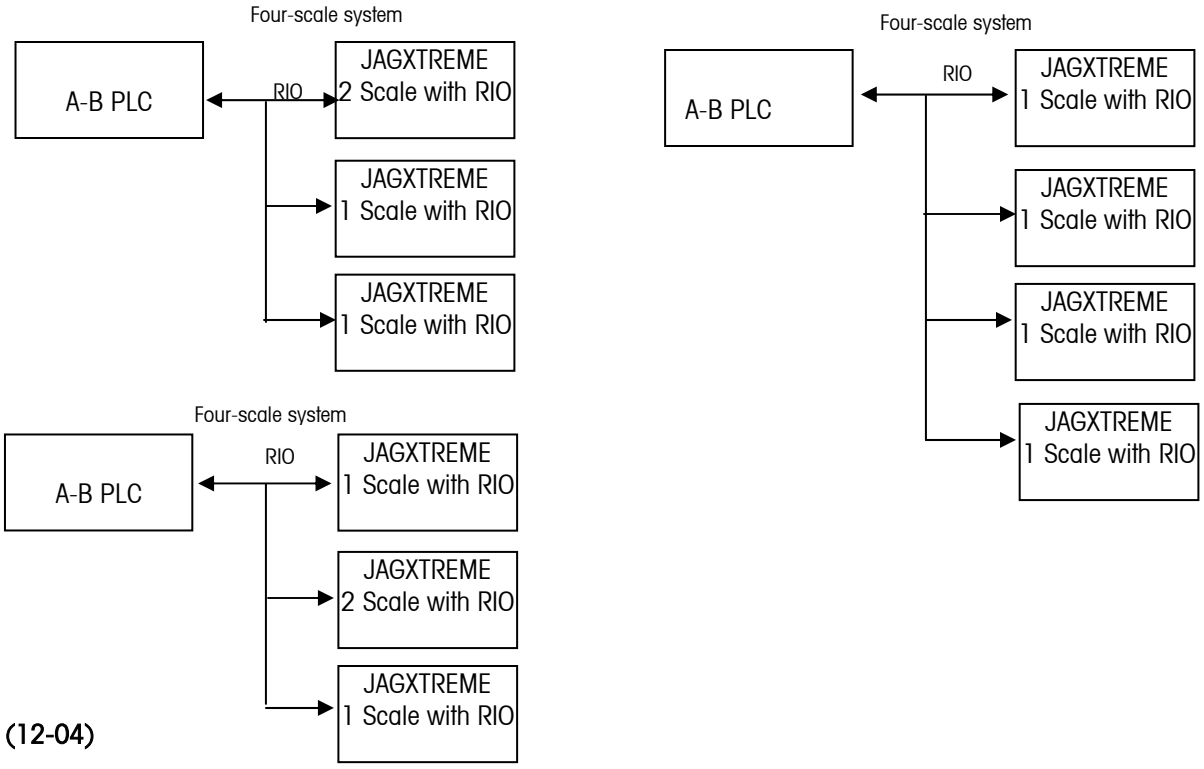

# Data Definition

The A-B RIO option card uses two types of data for its communication with PLCs: discrete data and block transfer data. Separate discrete data for each scale is always available. The data transfer is accomplished via the PLC's I/O messaging. Block transfer data is only available if this data option is enabled through the setup menu. If the block transfer data option is selected, it is provided in addition to the discrete data for each scale. Block transfer data requires "block transfer" ladder sequence programming to accomplish the data transfer between the terminal and PLC.

## Data Integrity

The JAGXTREME terminal has specific bits to allow the PLC to confirm that data was received without interrupt and the scale is not in an error condition. It is important to monitor these bits. Any PLC code should use them to confirm the integrity of the data received for the scale. Refer to the data charts for specific information regarding the Data OK, update in progress, data integrity bits and their usage.

## Discrete Data

There are four formats of discrete data available with the A-B RIO option card: integer (wgt), division (div), extended integer (ext), and floating point (flt). Only one type of data format may be selected and used by scales sharing the same A-B RIO option card.

The **integer** and **division** formats allow bi-directional communication of discrete bit encoded information or 16 bit binary word (signed integer) numerical values.

The **extended integer** format allows bi-directional communication of discrete bit encoded information, 21-bit binary word (signed extended integer) numerical read values or 16-bit binary word (signed integer) numerical write values.

The **floating-point** format allows bi-directional communication of discrete bit encoded information or numeric data encoded in IEEE 754, single precision floating point format.

The format of discrete data will affect the amount of rack space required per scale and the amount used by the RIO option. Integer, division, and extended integer formats require one-quarter rack per scale (two 16-bit words of input and two 16-bit words of output data). One scale would use a quarter rack, two scales would use a half rack, three scales would use three-quarters of a rack, and four scales would use a full rack.

The floating-point format requires more space per scale because floating point data uses two 16-bit words of data to represent just the numeric data alone. The floating point format requires one half rack per scale (four 16-bit words of input and four 16-bit words of output data) in a two-scale system or provides two half-rack sets of data for a single scale. For both, the RIO option requires the use of a full rack for data when the floating point format is selected.

Selection of the appropriate format depends on issues such as the range or capacity of the scale used in the application. The integer format can represent a numerical value up to 32,767. The division format can represent a value up to 32,767 divisions or increments. The extended integer can represent a value over 1,000,000. The floating-point format can represent a value encoded in IEEE 754, single precision floating point format. Floating point is the only format that includes decimal point information as a part of its data. All other formats ignore decimal points. Accommodation of decimal point location must take place in the PLC logic, when it is needed with these formats.

Example:

| | | 250 x .01 scale | | |
|---|---|---|---|---|
| Scale reads: | 0 | 2.00 | 51.67 | 250.00 |
| | | Format sent: | | |
| Int | 0 | 200 | 5167 | 25000 |
| Div | 0 | 200 | 5167 | 25000 |
| Ext | 0 | 200 | 5167 | 25000 |
| FLT | 0 | 2.00 | 51.67 | 250.00 |

Any of the formats could be used in this case.

| | | 50,000 x 10 scale | | |
|---|---|---|---|---|
| Scale reads: | 0 | 200 | 5160 | 50000 |
| | | Format sent: | | |
| Int | 0 | 200 | 5160 | -(xxxxx) |
| Div | 0 | 20 | 516 | 5000 |
| Ext | 0 | 200 | 5160 | 50000 |
| FLT | 0 | 200 | 5160 | 50000 |

The integer format could not be used because it would send a negative value once the weight exceeded 32,760.

| | | 150 x .001 scale | | |
|---|---|---|---|---|
| Scale reads: | 0 | 2.100 | 51.607 | 150.000 |
| | | Format sent: | | |
| Int | 0 | 2100 | -(xxxxx) | -(xxxxx) |
| Div | 0 | 2100 | -(xxxxx) | -(xxxxx) |
| Ext | 0 | 2100 | 51607 | 150000 |
| FLT | 0 | 2.100 | 51.607 | 150.000 |

The integer and division formats could not be used because they would send a negative value once the weight exceeded 32.767.

There is another requirement for the extended integer format. Since Allen-Bradley PLCs do not have any mechanism to interpret 21-bit signed integers, a few rungs of ladder logic are needed to convert the bit data into a floating point value.

Another issue is the type of information communicated between the terminal and PLC for the application. Because the floating point format has more space for its data, it has additional information that can be sent or received without using the optional block transfer data. Please see each formats detailed description of the data available to determine which is most suitable for the specific application.

## Discrete Data Rack Usage Comparison

The table below shows a comparison between the integer data formats and the floating point format of the input data:

Input data (from a JAGXTREME Terminal to PLC)

| Rack word # | Integer, Division, or Extended Integer | Floating Point |
|---|---|---|
| I:XX 0 | 1st Scale (weight) | 1st Scale command response |
| I:XX 1 | 1st Scale (status) | 1st Scale floating point Value |
| I:XX 2 | 2nd Scale (weight) | |
| I:XX 3 | 2nd Scale (status) | 1st Scale status |
| I:XX 4 | 3rd Scale (weight) | 2nd Scale command response* |
| I:XX 5 | 3rd Scale (status) | 2nd Scale floating point* Value |
| I:XX 6 | 4th Scale (weight) | |
| I:XX 7 | 4th Scale (status) | 2nd Scale status* |

* Can be a second set for first scale if second scale is not used

The table below shows a comparison between the integer data formats and the floating point format of the output data:

Output data (from a PLC to a JAGXTREME Terminal)

| Rack word # | Integer, Division, or Extended Integer | Floating Point |
|---|---|---|
| O:XX 0 | 1st Scale (load value) | Reserved |
| O:XX 1 | 1st Scale (command) | 1st Scale command |
| O:XX 2 | 2nd Scale (load value) | 1st Scale Floating point load value |
| O:XX 3 | 2nd Scale (command) | |
| O:XX 4 | 3rd Scale (load value) | 2nd Scale command* |
| O:XX 5 | 3rd Scale (command) | 2nd Scale Floating point load value* |
| O:XX 6 | 4th Scale (load value) | |
| O:XX 7 | 4th Scale (command) | |

* Can be a second set for first scale if second scale is not used

## Integer, Division, and Extended Integer

When one of these formats are selected, each scale will have one quarter rack of data: two 16-bit words for input data and two 16-bit words for output data. The PLC's input data will contain one 16-bit word for the scale's weight information and one 16-bit word for bit encoded status information. The terminal will send specific data to the PLC input data based on the data it receives from the PLC's output data. The PLC's output words consist of one 16-bit integer value which may be used to download a tare or setpoint 1 and one16-bit word for bit encoded command information.

The following charts provide detailed information on the integer (int), division (div), and the extended integer (ext) data formats. Read data refers to the PLC's input data and write data refers to the PLC's output data.

## DISCRETE READ INTEGER (wgt) or DIVISION (div) – JAGXTREME Terminal Output to PLC Input

| A-B octal Addr. | 17 | 16 | 15 | 14 | 13 | 12 | 11 | 10 | 7 | 6 | 5 | 4 | 3 | 2 | 1 | 0 |
|---|---|---|---|---|---|---|---|---|---|---|---|---|---|---|---|---|
| WORD 0 IN[1] | X | X | X | X | X | X | X | X | X | X | X | X | X | X | X | X |
| WORD 1 IN | Data[2] OK | Update[3] in prog | NET[4] mode | MOT[5] | PAR[6] 1.3 | PAR[6] 1.2 | PAR[6] 1.1 | ESC[7] key | SP8 | SP7 | SP6 | SP5 | SP4 | SP3 | SP2 | SP1 |
| Bit number | 15 | 14 | 13 | 12 | 11 | 10 | 9 | 8 | 7 | 6 | 5 | 4 | 3 | 2 | 1 | 0 |

1- WORD 0 is a 16-bit, signed integer that may represent the scale's gross, net, tare, rate, setpoint #1, or displayed weight. Three bits, set by the PLC in the output word, designate what data is sent by the terminal in this word.

2- Bit 15 is set to a 1 when the scale is operating properly (NOT over capacity, under capacity, in power-up, in expanded mode, or in setup mode).The PLC program should continuously monitor this bit and the PLC processor "rack fault" bit (see A-B PLC documentation) to determine the validity of the discrete and/or block transfer data.

3- Bit 14 is set to a 1 when the JAGXTREME terminal is in the process of updating its data for the PLC scanner. The PLC should ignore ALL of the data in this case and simply re-scan it.

4- Bit 13 is set to a 1 when the scale is in net mode (a tare has been taken).

5- Bit 12 is set to a 1 when the scale is unstable (or in motion).

6- Bits 9, 10, 11 mirror the state of the first three discrete inputs on the JAGXTREME terminal's controller board (labeled IN1, IN2, and IN3). If the input is ON (input grounded) then the bit is set to a 1.

7- Bit 8 is set to a 1 when the ESC key is pressed on the keypad of the JAGXTREME terminal with the RIO option card. The bit will be cleared to 0 when the display mode bits (see the output table) change from a 0 to any non-zero value.

## DISCRETE READ EXTENDED INTEGER (ext) – JAGXTREME Terminal Output to PLC Input

| A-B octal Addr. | 17 | 16 | 15 | 14 | 13 | 12 | 11 | 10 | 7 | 6 | 5 | 4 | 3 | 2 | 1 | 0 |
|---|---|---|---|---|---|---|---|---|---|---|---|---|---|---|---|---|
| WORD 0 IN[1] | X | X | X | X | X | X | X | X | X | X | X | X | X | X | X | X |
| WORD 1 IN | Data[2] OK | Update[3] in prog | NET[4] mode | MOT[5] | PAR[6] 1.3 | PAR[6] 1.2 | PAR[6] 1.1 | ESC[7] key | SP3 | SP2 | SP1 | X[1] sign bit | X[1] wgt bit 20 | X[1] wgt bit 19 | X[1] wgt bit 18 | X[1] wgt bit 17 |
| Bit number | 15 | 14 | 13 | 12 | 11 | 10 | 9 | 8 | 7 | 6 | 5 | 4 | 3 | 2 | 1 | 0 |

1- The scale's gross, net, tare, rate, setpoint #1, or displayed weight is represented by a 21-bit signed integer found in WORD 0 and the first 5 bits of WORD 1. Three bits, set by the PLC in the output word, designate what data is sent by the terminal in these bits. Bit 4 of WORD 1 is the sign bit and bit 15 of WORD 0 becomes part of the weight value.

2- Bit 15 is set to a 1 when the scale is operating properly (NOT over capacity, under capacity, in power-up, in expanded mode, or in diagnostic mode).The PLC program should continuously monitor this bit and the PLC processor "rack fault" bit (see A-B PLC documentation) to determine the validity of the discrete and/or block transfer data.

3- Bit 14 is set to a 1 when the JAGXTREME terminal is in the process of updating its data for the PLC scanner. The PLC should ignore ALL of the data in this case and simply re-scan it.

4- Bit 13 is set to a 1 when the scale is in net mode (a tare has been taken).

5- Bit 12 is set to a 1 when the scale is unstable (or in motion).

6- Bits 9, 10, 11 mirror the state of the first three discrete inputs on the JAGXTREME terminal's controller board (labeled IN1, IN2, and IN3). If the input is ON (input grounded) then the bit is set to a 1.

7- Bit 8 is set to a 1 when the ESC key is pressed on the keypad of the JAGXTREME terminal with the RIO option card. The bit will be cleared to 0 when the display mode bits (see the output table) change from a 0 to any non-zero value.

## DISCRETE WRITE INTEGER (wgt), DIVISION (div), or EXTENDED INTEGER (ext) – PLC Output to JAGXTREME Terminal Input

| A-B octal Addr. | 17 | 16 | 15 | 14 | 13 | 12 | 11 | 10 | 7 | 6 | 5 | 4 | 3 | 2 | 1 | 0 |
|---|---|---|---|---|---|---|---|---|---|---|---|---|---|---|---|---|
| WORD 0 OUT[1] | X | X | X | X | X | X | X | X | X | X | X | X | X | X | X | X |
| WORD 1 OUT | Load[2] SP-1 | PAR[3] 2.3 | PAR[3] 2.2 | PAR[3] 2.1 | Dislpy mode[4] | Disply mode[4] | Disply mode[4] | Disable setpts[5] | Zero[6] | Print[7] | Tare[8] | Clear[9] | Load Tare[10] | Select 3[11] | Select 2[11] | Select 1[11] |
| Bit number | 15 | 14 | 13 | 12 | 11 | 10 | 9 | 8 | 7 | 6 | 5 | 4 | 3 | 2 | 1 | 0 |

1- WORD 0 is a 16-bit, signed integer value that may represent the scale's tare or setpoint #1 value to be downloaded. Bit 3 or bit 15 are used with this value to instruct the JAGXTREME terminal to load the value into either the tare or setpoint #1.

2- A transition from 0 to 1 loads the value in WORD 0 into the setpoint 1 value in the JAGXTREME terminal. It will not "use" this value until bit 8 transitions from 0 to 1.

3- Bit 12, bit 13, and bit 14 can be used to control the state of the first three discrete outputs on the JAGXTREME terminal's controller board. These are labeled OUT1, OUT2, OUT3. Setting the bit to a 1 causes the output to be turned ON.

4- Bit 9, bit 10, and bit 11 determine what data is displayed in the JAGXTREME terminal's lower display area. 0 = normal JAGXTREME terminal display mode, 1 = display content of literal 1, 2 = display content of literal 2, 3 = display content of literal 3, 4 = display content of literal 4, 5 = display content of literal 5, 6 = reserved, 7 = display message from block transfer input data. Pressing ESC also clears the display to the JAGXTREME terminal's normal mode. Display literals may be pre-programmed in the JAGXTREME terminal setup through the Configure Memory program block. Literals may also be sent from the PLC via the shared data variables lit01, lit02, lit03, lit04, and lit05.

5- Set bit 8 to 0 to disable all of the JAGXTREME terminal's setpoint outputs. Set bit 8 to 1 to enable all of the JAGXTREME terminal's setpoint outputs. A transition from 0 to 1 causes the JAGXTREME terminal to accept new setpoint values for use.

6- A transition from 0 to 1 causes a ZERO command.

7- A transition from 0 to 1 causes a PRINT command.

8- A transition from 0 to 1 causes a TARE command.

9- A transition from 0 to 1 causes a CLEAR command.

10- A transition from 0 to 1 loads the value in WORD 0 into the preset tare register.

11-A binary value in bit 0, bit 1, and bit 2 select the data that will be sent by the JAGXTREME terminal in Discrete Read WORD 0. 0 = gross weight, 1 = net weight, 2 = displayed weight, 3 = tare weight, 4 = setpoint 1,
5 = rate. Any value greater than 5 = gross weight.

# Floating Point

## Operational Overview

The JAGXTREME terminal uses integer commands from the PLC to select the floating point weight output data. The terminal recognizes a command when it sees a new value in the scale's command word. If the command has an associated floating point value (for example: loading a setpoint value), it must be loaded into the floating point value words before the command is issued. Once the terminal recognizes a command, it acknowledges the command by setting a new value in the command acknowledge bits of the scale's command response word. It also tells the PLC what floating point value is being sent (via the floating point input indicator bits of the command response word). The PLC waits until it receives the command acknowledgment from the terminal before sending another command.

The terminal has two types of values that it can report to the PLC: real-time and static. When the PLC requests a real-time value, the terminal acknowledges the command from the PLC once but sends and updates the value at every A/D update. If the PLC requests a static value, the terminal acknowledges the command from the PLC once and updates the value once. The terminal will continue to send this value until it receives a new command from the PLC. Gross weight, net weight, and rate are examples of real-time data. Tare weight, setpoint cutoff, dribble, and tolerance values are examples of static data.

The terminal can send a rotation of up to nine different real-time values for each scale. The PLC sends commands to the terminal to add a value to the rotation. Once the rotation is established, the PLC must instruct the terminal to begin its rotation automatically, or the PLC may control the pace of rotation by instructing the terminal to advance to the next value. If the terminal is asked to automatically alternate its output data, it will switch to the next value in its rotation at the next A/D update. (The A/D update rate depends on the scale type. An analog scale has an update rate of 17 Hz or 58 milliseconds.)

The PLC may control the rotation by sending alternate report next field commands (1 and 2). When the PLC changes to the next command, the terminal switches to the next value in the rotation. The terminal stores the rotation in its shared data so the rotation does not have to be re-initialized after each power cycle. When the PLC does not set up an input rotation, the default input rotation consists of gross weight only. See the floating-point rotation examples for additional information.

The following charts provide detailed information on the floating-point data format. Read data refers to the PLC's input data and write data refers to the PLC's output data.

## DISCRETE READ FLOATING POINT (flt) – JAGXTREME Terminal Output to PLC Input

| A-B octal Addr. | 17 | 16 | 15 | 14 | 13 | 12 | 11 | 10 | 7 | 6 | 5 | 4 | 3 | 2 | 1 | 0 |
|---|---|---|---|---|---|---|---|---|---|---|---|---|---|---|---|---|
| WORD 0 IN Command Response | Cmnd Ack 2[1] | Cmnd Ack 1[1] | Data[2] integrity 1 | FP Input Ind 5[3] | FP Input Ind 4[3] | FP Input Ind 3[3] | FP Input Ind 2[3] | FP Input Ind 1[3] | RESERVED | | | | | | | |
| WORD 1 IN[4] FP value | X | X | X | X | X | X | X | X | X | X | X | X | X | X | X | X |
| WORD 2 IN[4] FP value | X | X | X | X | X | X | X | X | X | X | X | X | X | X | X | X |
| WORD 3 IN Status | Data[5] OK | Data[2] integrity 2 | NET[6] mode | MOT[7] | PAR[8] 1.3 | PAR[8] 1.2 | PAR[8] 1.1 | ESC[9] key | JagBAS bit2[10] | JagBAS bit1[10] | Scale[11] Selectd | SP-1 TOL[12] | SP-2 FF[12] | SP-1 FF[12] | SP-2 FEED[12] | SP-1 FEED[12] |
| Bit number | 15 | 14 | 13 | 12 | 11 | 10 | 9 | 8 | 7 | 6 | 5 | 4 | 3 | 2 | 1 | 0 |

1- The Command Acknowledge bits are used by the JAGXTREME terminal to inform the PLC that it has received a new, valid command. The JAGXTREME terminal rotates sequentially among values 1, 2, 3, 1, 2, 3, 1, 2, … to acknowledge it has processed a new command.

2- The Data Integrity bit in WORD 0 (bit 13) is used in conjunction with the bit in WORD 3 (bit 14) to insure that the floating point data is valid. For the data to be valid both bits must have the same polarity. These bits will change to the opposite state every A/D (scale) update. If they do not have the same value the data is invalid, the PLC should ignore ALL of the data in this case, and simply re-scan it.

3- The Floating Point Input Indication bits (WORD 0, bits 8-12) are used to determine what type of data is being sent in the floating point value (WORD 1 and WORD 2). These bits correspond to a decimal value of 0-31 which represent a particular type of data. See the Floating Point Input Indication Table to determine what type of data.

4- The Bits in WORD 1 and WORD 2 are a single-precision floating point value that may represent the scale's gross, tare, net, rate, setpoint 1, setpoint 2, fine gross, fine tare, fine net, custom JagBASIC, or filter setting data. The PLC command in the respective scale's output word determines what data will be sent.

5- Bit 15 is set to a 1 when the scale is operating properly (NOT over capacity, under capacity, in power-up, in expanded mode, or in diagnostic mode).The PLC program should continuously monitor this bit and the PLC processor "rack fault" bit (see A-B PLC documentation) to determine the validity of the discrete and/or block transfer data.

6- Bit 13 is set to a 1 when the scale is in net mode (a tare has been taken).

7- Bit 12 is set to a 1 when the scale is unstable (or in motion).

8- Bits 9, 10, 11 mirror the state of the first three discrete inputs on the JAGXTREME terminal's controller board (labeled IN1, IN2, and IN3). If the input is ON (input grounded) then the bit is set to a 1.

9- Bit 8 is set to a 1 when the ESC key is pressed on the keypad of the JAGXTREME terminal with the RIO option card. The bit will be cleared to 0 when the display mode bits (see the output table) change from a 0 to any non-zero value.

10- The JagBASIC custom bits can be used with a custom JagBASIC application to communicate special status to the PLC. The JagBASIC and PLC code define the meaning of these bits.

11- The Scale Selected bit allows the PLC to determine which scale is currently displayed on the upper weight display (for two scale systems). When the bit is set to 1, the scale associated with this data is selected.

12- These setpoint bits are used to report the status of the setpoint feed, fast feed, and tolerance conditions.

### Floating Point Input Indication Table

| Dec | Data | Dec | Data | Dec | Data |
|---|---|---|---|---|---|
| 0 | Gross Weight [1] | 8 | JagBASIC custom #2 [1] | 16 | Setpoint 2 dribble |
| 1 | Net Weight [1] | 9 | JagBASIC custom #3 | 17 | Setpoint 1 tolerance |
| 2 | Tare Weight [1] | 10 | JagBASIC custom #4 | 18 | Primary units, low increment size |
| 3 | Fine Gross Weight [1] | 11 | Low-pass filter frequency | 19-28 | Reserved |
| 4 | Fine Net Weight [1] | 12 | Notch filter frequency | 29 | Last JAGXTREME terminal error code |
| 5 | Fine Tare Weight [1] | 13 | Setpoint 1 cutoff | 30 | No data response command successful |
| 6 | Rate [1] | 14 | Setpoint 2 cutoff | 31 | No data response command failed |
| 7 | JagBASIC custom #1 [1] | | | | |

1-These are real-time fields that the PLC may request either through an input rotation or a report command. All other fields may only be requested through a report command.

## DISCRETE WRITE FLOATING POINT (flt) – PLC Output to JAGXTREME Terminal Input

| A-B octal Addr. | 17 | 16 | 15 | 14 | 13 | 12 | 11 | 10 | 7 | 6 | 5 | 4 | 3 | 2 | 1 | 0 |
|---|---|---|---|---|---|---|---|---|---|---|---|---|---|---|---|---|
| WORD 0 OUT | RESERVED | | | | | | | | | | | | | | | |
| WORD 1 OUT | Scale A command[1] | | | | | | | | | | | | | | | |
| WORD 2 OUT[2] FP load value | X | X | X | X | X | X | X | X | X | X | X | X | X | X | X | X |
| WORD 3 OUT[2] FP load value | X | X | X | X | X | X | X | X | X | X | X | X | X | X | X | X |
| WORD 4 OUT[3] | Scale B command[1] | | | | | | | | | | | | | | | |
| WORD 5 OUT[2,3] FP load value | X | X | X | X | X | X | X | X | X | X | X | X | X | X | X | X |
| WORD 6 OUT[2,3] FP load value | X | X | X | X | X | X | X | X | X | X | X | X | X | X | X | X |
| Bit number | 15 | 14 | 13 | 12 | 11 | 10 | 9 | 8 | 7 | 6 | 5 | 4 | 3 | 2 | 1 | 0 |

1- The command word (WORD 1 for scale A /and WORD 4 for scale B or the second set of data for scale A) is used to instruct the JAGXTREME terminal what data to send in the discrete read data, to load the floating point data in the write command, and to control the JAGXTREME terminal's discrete outputs or lower display. See the PLC Output Command Table for a list of the available commands and their respective decimal or hex value. Not all commands will require a value in the floating point load value words.

2- The Bits in WORD 2 and WORD 3 (or WORD 5 and WORD 6) are a single-precision floating point value. This value is used with the command in WORD 1 (or WORD 4) to instruct the JAGXTREME terminal to download the floating point value into the field specified in the command.

3- These words are used if scale B is present or a second data set for scale A is wanted.

PLC Output Command Table (Floating point only)

| Dec | (Hex) | Command |
|---|---|---|
| 0 | 00 | Report next rotation field @ next A/D update [1] |
| 1 | 01 | Report next rotation field [1,2] |
| 2 | 02 | Report next rotation field [1,2] |
| 3 | 03 | Reset rotation |
| 10 | 0a | Report gross weight [1,3] |
| 11 | 0b | Report net weight [1,3] |
| 12 | 0c | Report tare weight [1,3] |
| 13 | 0d | Report fine gross weight [1,3] |
| 14 | 0e | Report fine net weight [1,3] |
| 15 | 0f | Report tare weight [1,3] |
| 16 | 10 | Report rate [1,3] |
| 17 | 11 | Report JagBASIC value #1 [1,3,7] |
| 18 | 12 | Report JagBASIC value #2 [1,3,8] |
| 19 | 13 | Report low-pass filter frequency [3] |
| 20 | 14 | Report notch filter frequency [3] |
| 21 | 15 | Report setpoint 1 cutoff [3,4] |
| 22 | 16 | Report setpoint 2 cutoff [3,4] |
| 23 | 17 | Report setpoint 1 dribble [3,4] |
| 24 | 18 | Report setpoint 2 dribble [3,4] |
| 25 | 19 | Report setpoint tolerance [3,4] |
| 27 | 1b | Report JagBASIC value #3 [3,9] |
| 28 | 1c | Report JagBASIC value #4 [3,10] |
| 29 | 1d | Report error [3] |
| 30 | 1e | Report primary units [3] |
| 40 | 28 | Add gross weight to rotation |
| 41 | 29 | Add net weight to rotation |
| 42 | 2a | Add tare weight to rotation |
| 43 | 2b | Add fine gross weight to rotation |
| 44 | 2c | Add fine net weight to rotation |
| 45 | 2d | Add fine tare weight to rotation |
| 46 | 2e | Add rate to rotation |
| 47 | 2f | Add JagBASIC value #1 to rotation |
| 48 | 30 | Add JagBASIC value #2 to rotation |
| 60 | 3c | Load programmable tare value [5] |
| 61 | 3d | Pushbutton tare command |
| 62 | 3e | Clear command |
| 63 | 3f | Print command |
| 64 | 40 | Zero command |
| 65 | 41 | Select scale A |
| 66 | 42 | Select scale B |
| 67 | 43 | Select other scale |
| 68 | 44 | Custom print 1 command |
| 69 | 45 | Custom print 2 command |
| 70 | 46 | Custom print 3 command |
| 71 | 47 | Custom print 4 command |
| 72 | 48 | Custom print 5 command |
| 73 | 49 | Set low-pass filter frequency [5] |
| 74 | 4a | Set notch filter frequency [5] |

| Dec | (Hex) | Command |
|---|---|---|
| 75 | 4b | Reset ESC key |
| 78 | 4e | Disable error display |
| 79 | 4f | Enable error display |
| 80 | 50 | Set normal display mode |
| 81 | 51 | Display Literal 1 |
| 82 | 52 | Display Literal 2 |
| 83 | 53 | Display Literal 3 |
| 84 | 54 | Display Literal 4 |
| 85 | 55 | Display Literal 5 |
| 87 | 57 | Display shared data message |
| 88 | 58 | Disable weight display |
| 89 | 59 | Enable weight display |
| 90 | 5a | Set discrete OUT1 on |
| 91 | 5b | Set discrete OUT2 on |
| 92 | 5c | Set discrete OUT3 on |
| 93 | 5d | Set discrete OUT4 on |
| 100 | 64 | Set discrete OUT1 off |
| 101 | 65 | Set discrete OUT2 off |
| 102 | 66 | Set discrete OUT3 off |
| 103 | 67 | Set discrete OUT4 off |
| 110 | 6e | Set setpoint 1 cutoff value [4,5] |
| 111 | 6f | Set setpoint 1 dribble value [4,5] |
| 112 | 70 | Set setpoint 1 tolerance value [4,5] |
| 114 | 72 | Enable setpoint 1 [4] |
| 115 | 75 | Disable setpoint 1 [4] |
| 116 | 76 | Setpoint 1 use gross weight [4] |
| 117 | 77 | Setpoint 1 use net weight [4] |
| 118 | 78 | Setpoint 1 use rate [4] |
| 119 | 77 | Setpoint 1 fill [4] |
| 120 | 78 | Setpoint 1 discharge [4] |
| 121 | 79 | Enable setpoint 1 latching [4] |
| 122 | 7a | Disable setpoint 1 latching [4] |
| 123 | 7b | Reset setpoint 1 latch [4] |
| 130 | 82 | Set setpoint 2 cutoff value [4,5] |
| 131 | 83 | Set setpoint 2 dribble value [4,5] |
| 134 | 86 | Enable setpoint 2 [4] |
| 135 | 87 | Disable setpoint 2 [4] |
| 136 | 88 | Setpoint 2 use gross weight [4] |
| 137 | 89 | Setpoint 2 use net weight [4] |
| 138 | 8a | Setpoint 2 use rate [4] |
| 139 | 8b | Setpoint 2 fill [4] |
| 140 | 8c | Setpoint 2 discharge [4] |
| 141 | 8d | Enable setpoint 2 latching [4] |
| 142 | 8e | Disable setpoint 2 latching [4] |
| 143 | 8f | Reset setpoint 2 latch [4] |
| 150 | 96 | Set JagBASIC Output 1 value [6,11] |
| 151 | 97 | Set JagBASIC Output 2 value [6,12] |
| 152 | 98 | Set JagBASIC Output 3 value [6,13] |

| Dec | (Hex) | Command |
|---|---|---|
| 153 | 99 | Set JagBASIC Output 4 value [6,14] |
| 160 | a0 | Apply scale setup |
| 161 | a1 | Write scale calibration to EEPROM |
| 162 | a2 | Disable JAGXTREME terminal tare |
| 163 | a3 | Enable JAGXTREME terminal tare |

NOTES:

1 – A command that requests real-time fields from the JAGXTREME terminal. The JAGXTREME terminal updates this input data to the PLC at the A/D update rate of the scale

2 – A command used by the PLC to select the next field from the input rotation. The PLC must alternate between these two commands to tell the JAGXTREME terminal when to switch to the next field of the input rotation.

3 – A command requiring the JAGXTREME terminal to report a specific value in the PLC input message. As long as one of these commands is sent in the Scale Command, the JAGXTREME terminal will respond with the requested data and not data from an input rotation.

4 – The setpoint numbers are relative to each particular scale in the JAGXTREME terminal. Scale A uses setpoints 1 and 2. Scale B uses setpoints 3 and 4.

5 – A command that requires a floating point value output from the PLC to the JAGXTREME terminal. The JAGXTREME terminal reflects back this value in the floating point data of the input message to the PLC.

6 – A command used between the PLC and a JagBASIC application. This data has a four-byte length and is defined by the application.

7 – JagBASIC to PLC Floating Point Variable BAS 18

8 – JagBASIC to PLC String Variable BAS19

9 – JagBASIC to PLC Floating Point Variable BAS 20

10 – JagBASIC to PLC String Variable BAS 21

11 – JagBASIC to PLC Floating Point Variable BAS 14

12 – JagBASIC to PLC String Variable BAS15

13 – JagBASIC to PLC Floating Point Variable BAS 16

14 – JagBASIC to PLC String Variable BAS17

### Floating Point Command Examples

Data requirement: only net weight sent (continuously) for scale 1

| Step # | Scale command (from PLC) | Scale Floating Point Value | Command response from terminal | Floating Point Value |
|---|---|---|---|---|
| 1 (PLC sends command to JAGXTREME terminal to report net weight) | 11 (dec) loaded into command word O:XX1 | none required | | |
| 2 (JAGXTREME terminal sees new command) | | | Command ack. =1 F.P. ind. = 1 (net) | Net weight in floating point |
| As long as the PLC leaves the 11 (dec) in the command word the JAGXTREME terminal will update the net value every A/D cycle. | | | | |

Data requirement: load setpoint 1 cutoff value = 21.75 for scale 1

| Step # | Scale command (from PLC) | Scale Floating Point Value | Command response from terminal | Floating Point Value |
|---|---|---|---|---|
| 1 (PLC loads floating point value first) | | floating point value = 21.75 | | |
| 2 (PLC sends command to set setpoint 1 cutoff value) | 110 (dec) loaded into command word O:XX1 | floating point value = 21.75 | | |
| 3 (JAGXTREME terminal sees new command , loads the value into the setpoint and ends a return message to indicate the new setpoint value) | | | Command ack. = 1 F.P. ind = 13 | Floating point value = 21.75 |
| 4 (PLC instructs JAGXTREME terminal to start "using" new setpoint value) | 114 (dec) loaded into command word O:XX1 | | | |
| 5 (JAGXTREME terminal sees new command) | | | Command ack. = 2 F.P. ind = 30 | (null value) |
| The PLC should always wait to receive a command acknowledgment before sending the next command to the JAGXTREME terminal. After the PLC finishes loading its setpoint value, it can resume monitoring the weight information required by sending a command to report some type of weight or set up a rotation of reported data. | | | | |

Data requirement: rotation of gross weight and rate updated on A/D

| Step # | Scale command (from PLC) | Scale Floating Point Value | Command response from terminal | Floating Point Value |
|---|---|---|---|---|
| 1 (PLC clears out any previous rotation with reset) | 3 (dec) loaded into command word O:XX1 | | | |
| 2 (JAGXTREME terminal sees new command) | | | Command ack.= 1 F.P. ind = 30 | |
| 3 (PLC adds gross weight to rotation) | 40 (dec) loaded into command word O:XX1 | (null value) | | |
| 4 (JAGXTREME terminal sees new command) | | | Command ack. = 2 F.P. ind = 30 | |
| 5 (PLC adds rate to the rotation) | 46 (dec) loaded into command word O:XX1 | | | |
| 6 (JAGXTREME terminal sees new command) | | | Command ack. = 3 F.P. ind = 30 | (null value) |
| At this point, the rotation has been set up. Now the PLC needs to command the JAGXTREME terminal to begin the rotation. | | | | |
| 7 (PLC sends the command to begin the rotation at A/D) | 0 (dec) loaded into command word O:XX1 | | | |
| 8 (JAGXTREME terminal sends gross weight at A/D update ~ 58 msec) | | | Command ack. = 0 F.P. ind = 0 | Floating point value = gross wt. |
| 9 (PLC leaves 0 in its command word and the JAGXTREME terminal sends the rate value at the next A/D) | 0 (dec) loaded into command word O:XX1 | | Command ack. = 0 F.P. ind = 6 | Floating point value = rate |
| 10 (PLC leaves 0 in its command word and JAGXTREME terminal sends the gross value at next A/D) | 0 (dec) loaded into command word O:XX1 | | Command ack. = 0 F.P. ind = 0 | Floating point value = gross wt. |
| 11 (PLC leaves 0 in command word and JAGXTREME terminal sends the rate value at the next A/D) | 0 (dec) loaded into command word O:XX1 | | Command ack. = 0 F.P. ind = 6 | Floating point value = rate |
| This rotation continues until the PLC sends a different command. At approximately every 58 msec the JAGXTREME terminal updates its data with the next field in its rotation. The PLC must check the floating point indication bits to determine which data is in the floating point value. | | | | |

Data requirement: rotation of net weight and rate updated on PLC command

| Step # | Scale command (from PLC) | Scale Floating Point Value | Command response from terminal | Floating Point Value |
|---|---|---|---|---|
| 1 (PLC clears out any previous rotation with reset) | 3 (dec) loaded into command word O:XX1 | | | |
| 2 (JAGXTREME terminal sees new command) | | | Command ack.= 1 F.P. ind = 30 | |
| 3 (PLC adds net weight to rotation) | 41 (dec) loaded into command word O:XX1 | (null value) | | |
| 4 (JAGXTREME terminal sees new command) | | | Command ack. = 2 F.P. ind = 30 | |
| 5 (PLC adds rate to the rotation) | 46 (dec) loaded into command word O:XX1 | | | |
| 6 (JAGXTREME terminal sees new command) | | | Command ack. = 3 F.P. ind = 30 | (null value) |
| At this point, the rotation has been set up. Now the PLC needs send commands to the JAGXTREME terminal to begin the rotation and advance to the next value when required. | | | | |
| 7 (PLC sends the command to report the first field in the rotation.) | 1 (dec) loaded into command word O:XX1 | | | |
| 8 (JAGXTREME terminal acknowledges the command and sends net weight at every A/D update until the PLC gives the command to report the next rotation field.) | | | Command ack. = 1 F.P. ind = 1 | |
| 9 (PLC sends the command to report the next field.) Note: if the PLC leaves the 1 (dec) in the command, the JAGXTREME terminal does NOT see this as another command to report the next rotation field. | 2 (dec) loaded into command word O:XX1 | | | |
| 10 (JAGXTREME terminal acknowledges the command and sends rate at every A/D update until the PLC gives the command to report the next rotation field.) | | | Command ack. = 2 F.P. ind = 6 | Floating point value = rate |

| | | | | |
|---|---|---|---|---|
| 11<br>(PLC sends the command to report the next field in the rotation.) | 1 (dec) loaded into command word O:XX1 | | | |
| 12<br>(JAGXTREME terminal acknowledges the command and sends net weight at every A/D update until the PLC gives the command to report the next rotation field.) | | | Command ack. = 1<br>F.P. ind = 1 | Floating point value = net wt. |
| 13<br>(PLC sends the command to report the next field.) | 2 (dec) loaded into command word O:XX1 | | | |
| 14<br>(JAGXTREME terminal acknowledges the command and sends rate at every A/D update until the PLC gives the command to report the next rotation field.) | | | Command ack. = 2<br>F.P. ind = 6 | Floating point value = rate |
| At approximately every 58 msec the JAGXTREME terminal updates its data with new data, but it does not advance to the next field in the rotation until the PLC sends it the command to report the next field. The PLC should check the floating point indication bits to determine which data is in the floating point value. | | | | |

### Floating Point Data Format and Compatibility

In Floating Point Message mode, the PLC and terminal exchange weight, rate, setpoint, and tare data in single-precision floating point format. The IEEE Standard for Binary Floating-Point Arithmetic, ANSI/IEEE Standard 754-1985, specifies the format for single-precision floating point numbers. It is a 32-bit number that has a 1-bit sign, an 8-bit signed exponent, and a 23-bit mantissa. The 8-bit signed exponent provides scaling of weight and rate data. The 23-bit mantissa allows representation of 8 million unique counts.

Although the single-precision floating point number provides greater numerical precision and flexibility than integer weight representations, it has limitations. The weight representation may not be exact, particularly for the extended-resolution weight fields for high-precision bases.

Some Allen-Bradley PLCs require special integrity checking to communicate floating point numbers across the Remote I/O link. The Allen-Bradley PLC-5 and KTX Scanner Card programs must check two data integrity bits to verify the integrity of the floating point data it reads from the terminal. Allen-Bradley SLC programs always read valid floating-point data from JAGXTREME terminals and do not have to make special checks to guarantee the validity of the floating-point data. The Allen-Bradley PLC-3 and PLC-5/250 cannot support terminals in floating point mode as they cannot guarantee the integrity of the floating-point data.

There are two data integrity bits that the terminal uses to maintain data integrity when communicating with the Allen-Bradley PLC-5 Remote I/O Scanner or KTX Scanner Card. One bit is in the beginning byte of the data; the second is in the ending byte of the data for a scale slot. The PLC program must verify that both data integrity bits have the same polarity for the data in the scale slot to be valid. There is a possibility that the PLC program will see several consecutive invalid reads when the terminal is freely sending weigh updates to the PLC-5 program detects this condition, it should send a new command to the terminal.

The Allen-Bradley SLC PLC programs do not have to make special checks to guarantee the validity of the floating-point data.

### Shared Data Mode

The Shared Data mode PLC communications is not available in Allen-Bradley PLCs. Block Transfer communications is used instead.

## Block Transfer

Note: Do not use Block Transfer mode for real-time communications.

Block Transfer mode is much less efficient than the discrete data modes, which are optimized for real time communications of weight and status data. Block Transfer mode accesses the terminal's "Shared Data" directory structure each time a data item is accessed. By contrast, the weight-synchronous mode communications has a direct interface to a limited number of real time terminal data fields.

### Block Transfer Data

Block transfer allows the JAGXTREME terminal and PLC to exchange many types of data in blocks of up to 128 bytes. It also enables the PLC to write messages directly to the terminal's lower display area.

Block transfer works concurrently with discrete data. Discrete mode communicates continuously in the background and a block transfer occurs only when the PLC program executes a block transfer read or write instruction. Data transfer is controlled by the PLC.

# Block Transfer Formats

Block Transfer Write (Words 0 - 63) to JAGXTREME Terminal

| Base # | 0 | 1 | 2 | 3 | 4 | 5 | 6 | 7 | 8 | 9 |
|---|---|---|---|---|---|---|---|---|---|---|
| N#:0 | Display Mode * | 16 Byte Display String: sent from PLC to JAGXTREME terminal to be displayed if preceding word is non-zero value and discrete display bits are set to 7 | | | | | | | | 8 Byte>> ASCII |
| N#:10 | <<Floating Point Write Field Code: shows where next value will be loaded | | | Floating Point Write Value | | 8 Byte ASCII String Write Field Code: shows where the next value will be loaded | | | | 40 Byte>> |
| N#:20 | <<40 Byte String Data >> | | | | | | | | | |
| N#:30 | << 40 Byte String Data: note if string is shorter than 40 bytes it must be left justified and null-terminated | | | | | | | | | 8 Byte>> ASCII |
| N#:40 | <<Floating Point Read Field Code: requests FP value for BTR | | | 8 Byte (ASCII) String Read Field Code: requests string value for BTR | | | | Reserved | | |
| N#:50 | Reserved | | | | | | | | | |
| N#:60 | Reserved | | | | | | | | | |

Block Transfer Read (Words 0 - 63) from JAGXTREME Terminal

| Base # | 0 | 1 | 2 | 3 | 4 | 5 | 6 | 7 | 8 | 9 |
|---|---|---|---|---|---|---|---|---|---|---|
| N#:0 | 8 Byte (ASCII) Floating Point Read Field Code: name of value sent in next field | | | | Floating Point Read Value | | 8 Byte (ASCII) String Read Field Code: name of string sent in next field | | | |
| N#:10 | 40 Byte Data String>> | | | | | | | | | |
| N#:20 | << 40 Byte Data String: note if string is shorter than 40 bytes it must be left-justified (and null-terminated) | | | | | | | | | |
| N#:30 | Reserved | | | | | | | | | |
| N#:40 | Reserved | | | | | | | | | |
| N#:50 | Reserved | | | | | | | | | |
| N#:60 | Reserved | | | | | | | | | |

* Display Mode: The integer value of this word determines how the JAGXTREME lower display operates: 0 = reset display to normal mode, 1 = display until overwritten by PLC or ESC is pressed, 2 = display for 30 seconds, 3 = display for 60 seconds, any value > 3 = reserved.
All Field Codes must be five right-justified bytes expanded to eight with three leading spaces.
Example SD = wt101 . Hex value of field code = 2020 2077 7431 3031

Addressing Examples:

1) A two terminal system with two scales per JAGXTREME terminal is configured as rack 01. The BTR and BTW mode cannot be used since the full rack must be used for discretes. Scale 1A would write its outputs to I:010.0 - I:011.17 of the PLC. Scale 1B would write its outputs to I:012.0 - I:013.17 of the PLC. Scale 2A would write its outputs to I:014.0 - I:015.17 of the PLC. Scale 2B would write its outputs to I:016.0 - I:017.17 of the PLC. Each scale would read its inputs from a corresponding output address of the PLC. (Example: scale 1A and O:010.0 - O:011.17)
2) A two terminal system with two scales and one A/B RIO card per JAGXTREME terminal. JAGXTREME terminal #1 is configured as rack 01, JAGXTREME terminal #2 is configured as rack 02. BTR and BTW are enabled. Each rack is configured as 3/4: the first quarter for block transfer, the second quarter for scale A, and the third quarter for scale B. Scale 1A would write its outputs to I:012.0 - I:013.17 of the PLC. Scale 1B would write its outputs to I:014.0 - I:015.17 of the PLC. Scale 2A would write its outputs to I:022.0 - I:023.17 of the PLC. Scale 2B would write its outputs to I:024.0 - I:025.17 of the PLC. Each scale would read its input from a corresponding output address of the PLC. (Example: scale 1A and O:012.0 - O:013.17)
BTW at N11:0, BTR at N11:64 > 8 byte FP write field code is at N11:09 - N11:12, 8 byte FP read field code request from BTW is at N11:39 - N11:42, 8 byte FP read field code in BTR is at N11:64 - N11:67, 8 byte string read field code in BTR is at N11:70 - N11:73.

Note: Refer to the METTLER TOLEDO Shared Data Reference Guide.

## Floating Point and String Data Field Codes for BTW/BTR

The following charts describe some of the floating point and string data fields that the JAGXTREME terminal can access. String data fields are serial ASCII character strings. Each table contains the following information:

**Field Code**-is the ASCII field that must be loaded into the Block Transfer write buffer. It identifies the data that is written to the terminal or returned by the terminal in a Block Transfer read.

The field code must be expanded to eight bytes by filling with three leading spaces. If the field code contains an "*n*" it should be replaced by the scale number (1 or 2 for scale A or B) or the setpoint number (1-8).

**Description**-is a description of the field.

**Read/Write**-indicates whether the PLC can read and/or write to the field.

**Length**-is the number of bytes (length) of the field. All floating point values are 4 bytes (2 words) long. Strings are the length specified.

| Floating Point Data Fields | | | |
|---|---|---|---|
| Field Code | Description | Read/Write | Length |
| wtn10 | Gross Weight | R | 4 |
| wtn11 | Net Weight | R | 4 |
| wtn12 | Auxiliary Gross Weight | R | 4 |
| wtn13 | Auxiliary Net Weight | R | 4 |
| wsn04 | Tare Weight | R | 4 |
| wsn05 | Auxiliary Tare Weight | R | 4 |
| spn05 | Setpoint Coincidence Value | R/W | 4 |

"n" must be replaced with the appropriate scale number or setpoint number. For example, wt110 or wt210.

| String Data Fields | | | |
|---|---|---|---|
| Field Code | Description | Read/Write | Length |
| wtn01 | Gross Weight | R | 12 |
| wtn02 | Net Weight | R | 12 |
| wtn03 | Weight Units | R | 2 |
| wtn04 | Auxiliary Gross Weight | R | 12 |
| wtn05 | Auxiliary Net Weight | R | 12 |
| wtn06 | Auxiliary Weight Units | R | 2 |
| s_200 | Scale Motion A (0 or 1 binary) | R | 1B[1] |
| s_201 | Center of Zero A (0 or 1 binary) | R | 1B[1] |
| s_202 | Over Capacity A (0 or 1 binary) | R | 1B[1] |
| s_203 | Under Zero A (0 or 1 binary) | R | 1B[1] |
| s_204 | Net Mode A | R | 1B[1] |
| s_207 | Scale A Selected | R | 1B[1] |
| s_208 | Scale Motion B | R | 1B[1] |
| s_209 | Center of Zero B | R | 1B[1] |
| s_20a | Over Capacity B | R | 1B[1] |
| s_20b | Under Zero B | R | 1B[1] |
| s_20c | Net Mode B | R | 1B[1] |
| s_20f | Scale B Selected | R | 1B[1] |
| wsn01 | Scale Mode (Gross or Net) | R | 1 |
| wsn02 | Tare Weight | R | 12 |
| wsn03 | Auxiliary Tare Weight | R | 12 |
| wsn06 | Current Units (1=primary, 2=secondary) | R | 1I[3] |
| wsn07 | Tare Source (1=PB, 2=KB, 3=auto) | R | 1I[3] |

"n" must be replaced with the appropriate scale number. For example, wt101 or wt201.

| String Data Fields | | | |
|---|---|---|---|
| Field Code | Description | Read/ Write | Length |
| csn01 | Auxiliary Display Units (1=lb, 2=kg, 3=g, 4=oz, 5=lb/oz, 6=troy oz, 7=pennyweight, 8=metric tons, 9=tons, 10=custom) | R | 1I[3] |
| csn02 | Custom Units Name | R/W | 6 |
| csn18 | Scale ID | R/W | 8 |
| spn01 | Setpoint Name | R/W | 8 |
| spn02 | Setpoint Assignment (0=none, 1=scale A, 2=scale B) | R | 1I[3] |
| jag07 | Julian Date | R | 8 |
| jag08 | Julian Time | R | 8 |
| jag09 | Consecutive Number | R/W | 2 |
| jag11 | Software ID | R | 12 |
| jag20 | Time | R | 11 |
| jag21 | Weekday | R | 10 |
| lit01[2] | User Literal 1 | R/W | 40 |
| lit20 | User Literal 20 | R/W | 40 |
| Pmt01[2] | User Prompt 1 | R/W | 40 |
| Pmt20 | User Prompt 20 | R/W | 40 |
| var01[2] | User Variable 1 | R/W | 40 |
| var20 | User Variable 20 | R/W | 40 |

1 Fields identified as 1B are returned as a binary 0 or 1 designating false or true.

2 There are 20 each user literals, prompts and variables numbered 01-20.

3 Fields identified as 1I are returned as integer values as described.

"n" must be replaced with the appropriate scale number. For example, cs118 or cs218.

## Controlling the Discrete I/O Using a PLC Interface

The JAGXTREME terminal provides the ability to directly control its discrete outputs and read its discrete inputs via the (digital) PLC interface options. System integrators should be aware that the terminal's discrete I/O updates are synchronized with the terminal's A/D rate and not with the PLC I/O scan rate. This may cause a noticeable delay in reading inputs or updating outputs as observed from the PLC to real world signals.

# Hardware Setup

## Wiring

The JAGXTREME terminal's A-B RIO option card uses a three-position removable terminal strip to connect to the A-B RIO network interface. Cable distance, type, and termination are specified by Allen-Bradley (See Allen-Bradley documentation for reference on cable design guidelines for the various PLCs).

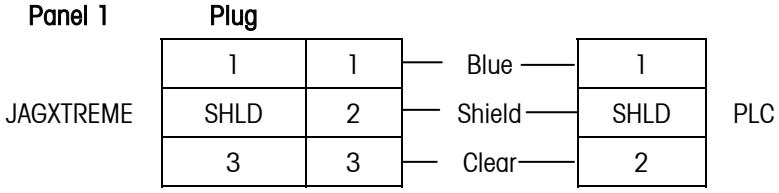


## JAGXTREME Terminal A-B RIO Option Card

The JAGXTREME terminal's RIO option card has three jumpers. They should not be changed from their default positions. The default positions are as follows:

| | |
|---|---|
| W1 | IRQ3 (I3) position |
| W2 | installed |
| W3 | installed |

# Software Setup

The JAGXTREME terminal automatically detects the presence of an RIO option board if one is installed. When detected, the terminal adds the Allen-Bradley parameters in a program block immediately following the Diagnostics block **called CONFIGURE OPTIONS**. You can configure these parameters just as you configured the other blocks. To configure the Allen-Bradley, first select **CONFIG OPTIONS**, then select the Allen-Bradley block. The following diagram describes the Allen-Bradley program block:

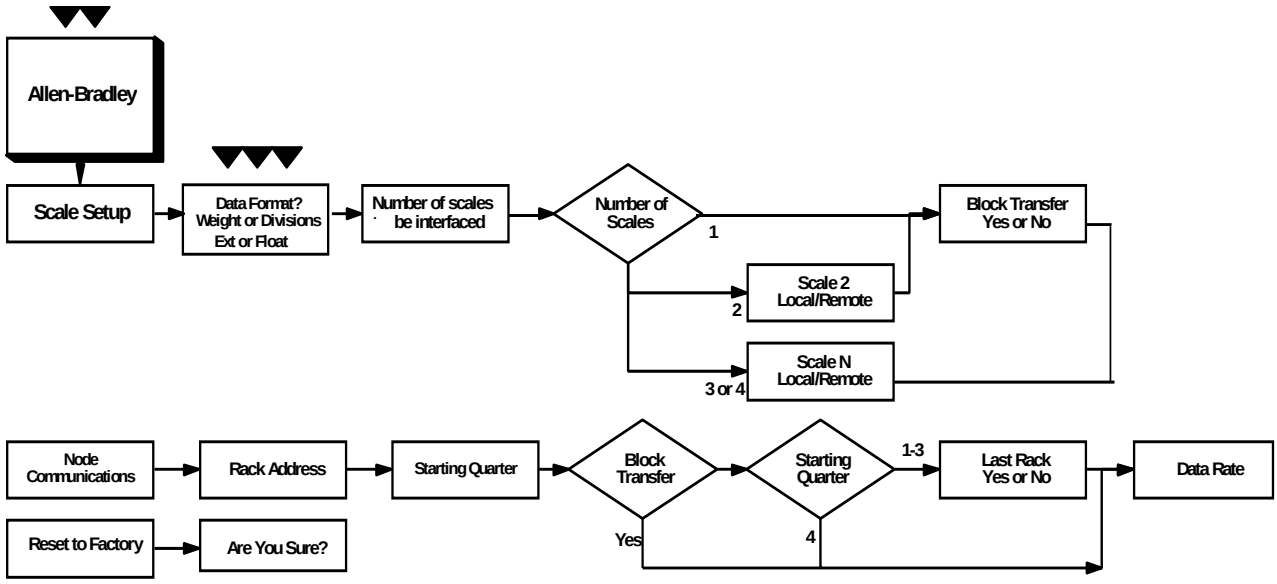

## Scale Setup Sub-block

The Scale Setup sub-block lets you specify how the Allen-Bradley interface is used. Several options are available to correspond with your system setup.

To configure the block:

You must enter setup and configure each scale that is interfaced with the A-B RIO network. Refer to the JAGXTREME Terminal Technical Manual for details on configuring the Network Program Block.

Press **ENTER** at the **Allen-Bradley** prompt to access the program block.

Press **ENTER** at the **Scale Setup** prompt. At the **Data Format?** prompt, press **SELECT** to choose the desired weight display option:

**Wgt**—displays scale weight in the selected weight unit (lb, kg, or g).

**Div**—displays scale weight in display divisions. The PLC multiplies the display divisions by the increment size to calculate the weight in display units.

The divisions display option is useful for heavy capacity scales that exceed the ± 32767 range of a signed integer in displayed weight units.

**Ext**—displays scale weight in the extended 21 signed bit format.

**Flt**---displays weight in floating point data format

- Refer to the Discrete Read and Discrete Write tables in this manual for additional information on mapping of discrete read data to the PLC.
- At the **Nbr of Scales?** prompt, press **SELECT** to display the number of scales to be interfaced (1, 2, 3, or 4).

**If 1 or 2 Scales or No Scales Remote**

- At the **Blk Transfer?** prompt, select **Y(es)** if the A-B RIO will communicate with the JAGXTREME terminal using block transfer. Select **N(o)** if block transfer is not required.

Local refers to a scale in the same terminal as the A-B option card. Remote refers to a scale interfaced across Ethernet.

**If 2 or More Scales**

- At the **Scale N?** prompt, press **SELECT** to indicate if the designated scale is local or remote.
- For remote scales, select the terminal number (Ethernet node location) at the **Node?** prompt.
- At the **Internal Scale?** prompt, identify each scale as A, B, C or D.

Press **ENTER** to go to the next sub-block or **ESCAPE** to exit setup mode.

## Node Communications Sub-block

This manual does not provide all information and configuration parameters for an Allen-Bradley network. Refer to Allen-Bradley documentation for information on specific network performance.

If block transfer is enabled, steps 3 and 4 do not apply. Continue to step 5.

If enabled, block transfer always uses the first quarter. The first scale is the second quarter, and the second scale is the third quarter.

Reset to Factory returns all parameters for this block to their original settings. You cannot reset a single value or specify only a few of the sub-block values.

This sub-block lets you enter the Allen-Bradley RIO network communication parameters. The JAGXTREME terminal programs the Node Adapter Chip with these parameters.

1. Press **ENTER** at the **Node Communicate** prompt to configure communications parameters.
2. At the **Rack Address?** prompt, use the numeric keys to input the rack address (0-64 octal), then press **ENTER**.
3. At the **Start Quarter?** prompt, press **SELECT** to choose the starting quarter address (1-4). This prompt may be omitted depending on the data format and number of scales.
4. At the **Last Rack?** prompt, select **Y(es)** if the rack is the last quarter of this rack address, or **N(o)** if it is not.
5. At the **Data Rate?** prompt, press **SELECT** to choose the appropriate baud rate (57.6k, 115.2k, 230.4k).

## Reset to Factory Sub-block

If desired, you can reset all of the parameters for this program block to the original default values. To reset the program block parameters:

Press **ENTER** at the **Reset to Factory** prompt.

At the **Are You Sure?** prompt, press **SELECT** to highlight **Y(es)** to confirm and reset the values to factory defaults, or select **N(o)** if you do not wish to reset the values.

Press **ESCAPE** to exit the sub-block.

Press **SELECT** to continue to another program block if desired.

# Troubleshooting

### A-B RIO Option PCB Status Lights

The A-B RIO option card has a status LED that operates in three modes to indicate the following:

| | |
|---|---|
| **ON** | Normal operation |
| **Flashing** | PLC in program mode |
| **OFF** | Communication problem between JAGXTREME terminal and PLC |

# Allen-Bradley RIO PCB Parts

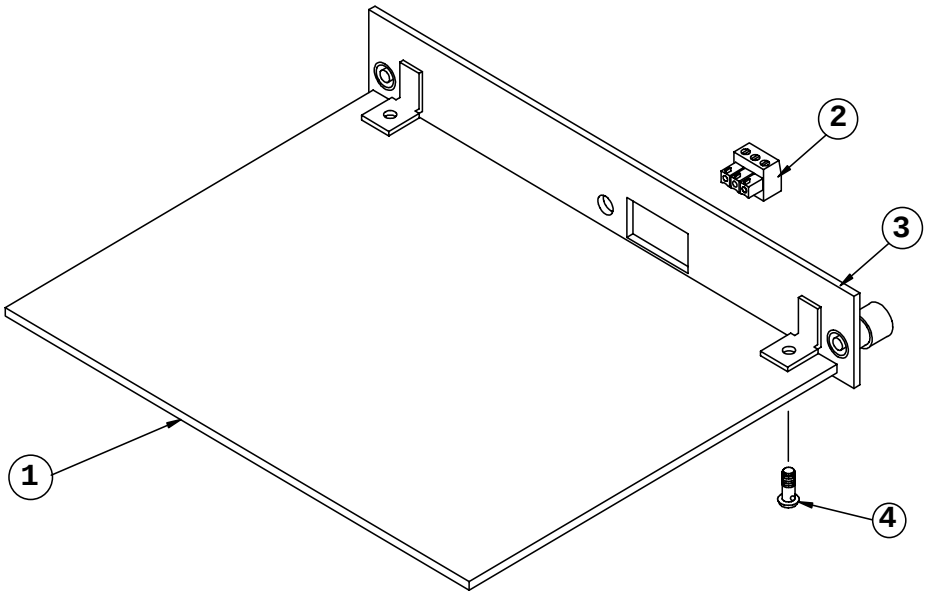


Allen-Bradley RIO Assembly

| Ref # | Part Number | Description | QTY |
|---|---|---|---|
| 1 | (*)140934 00A | Allen-Bradley I/O PCB | 1 |
| 2 | (*)142174 00A | Connector, 3 Position Terminal Block | 1 |
| 3 | (*)141624 00A | Plate Assembly, Allen-Bradley I/O | 1 |
| 4 | R05111 00A | Screw, M4 X 10 Taptite | 2 |
| * | (*)141634 00A | Allen-Bradley I/O PCB Panel Assembly | 1 |

* Includes all parts listed above as an assembly.

(*) May include prefix revision letter.

# Interfacing Examples

The following pages show ladder logic programming examples.

## SLC Program Example

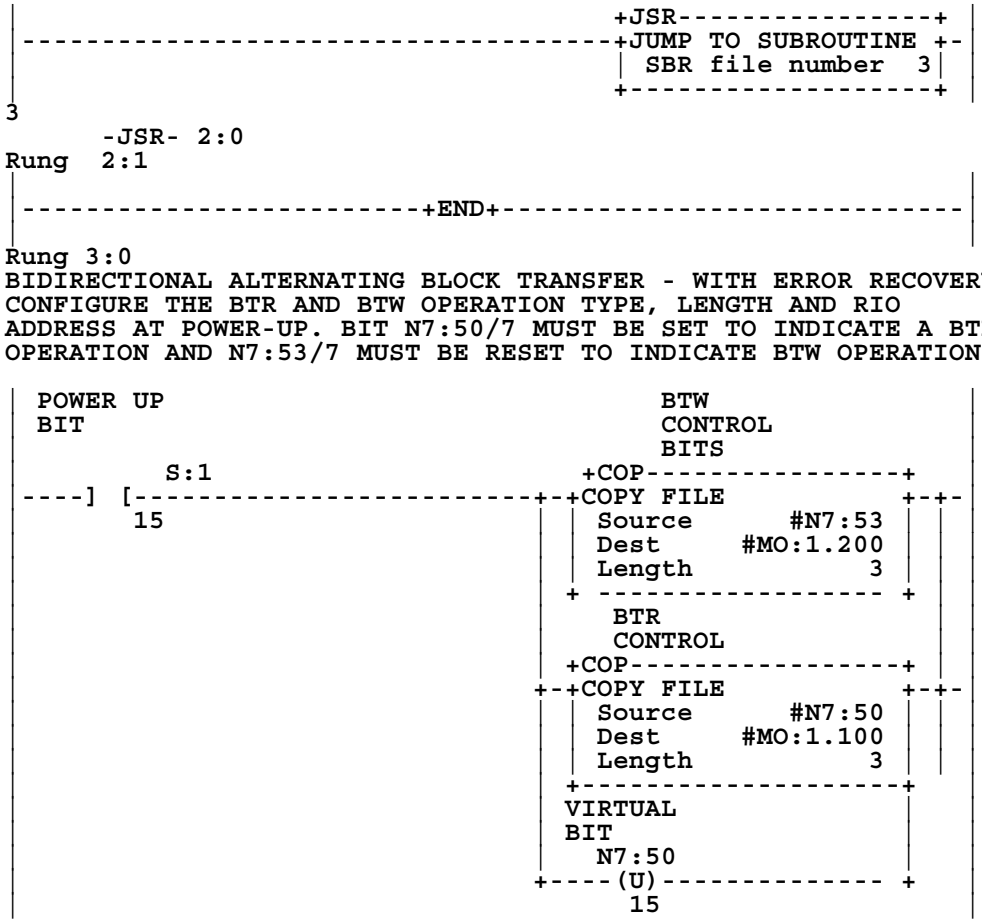

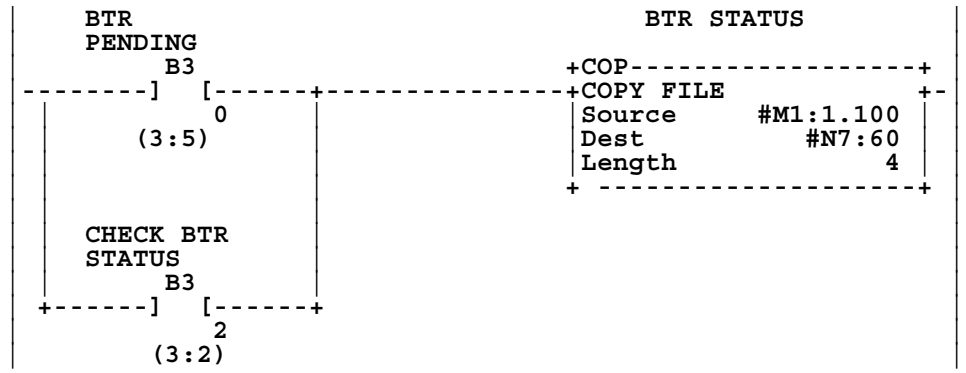


```
B3/0
      - ] [ -     3:1
      - (L) -     3:9
      - (U) -     3:5  3:6

B3/2
      - ] [ -     3:1
      - (L) -     3:5  3:6
      - (U) -     3:2

M1:1.100
      -COP- 3:1
N7:60
      -COP- 3:1
```

Rung 3:2
UNLATCH THE BIT THAT CONTINUES TO CHECK THE BTR STATUS. WHEN A BTR IS
COMPLETE, THE DONE BIT IS SET. THE LADDER PROGRAM MUST THEN UNLATCH THE ENABLE BIT, THEN WAIT FOR THE SN TO TURN OFF THE DONE BIT BEFORE ANOTHER BTR TO THE SAME M-FILE LOCATION CAN BE INITIATED. THIS IS ONE COMPLETE BTR CYCLE.

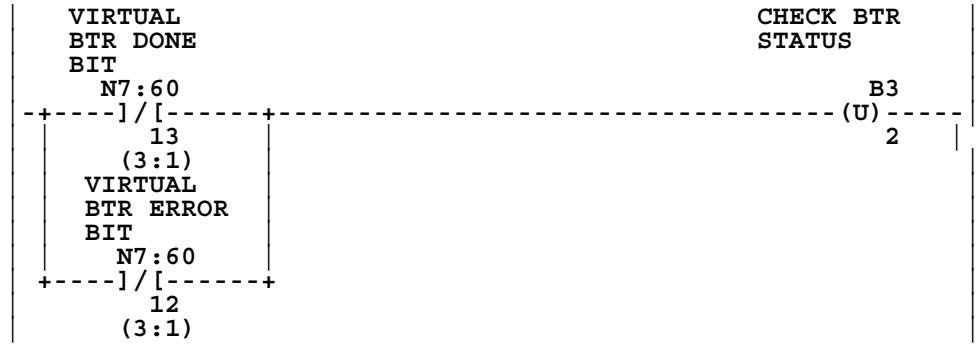


```
B3/2
      -] [- 3:1
      -(L)- 3:5  3:6
      -(U)- 3:2

N7:60/12
      -] [- 3:6  3:10
      -]/[- 3:2  3:9

N7:60/13
      -] [- 3:5  3:10
      -]/[- 3:2  3:9
```

```
Rung 3:3
COPY THE BTW STATUS AREA TO AN INTEGER FILE ONLY WHEN A BTW IS
IN PROGRESS. THIS STATUS DATA WILL THEN BE USED THROUGHOUT THE
PROGRAM AND WILL LIMIT THE NUMBER OF M-FILE ACCESSES.
```

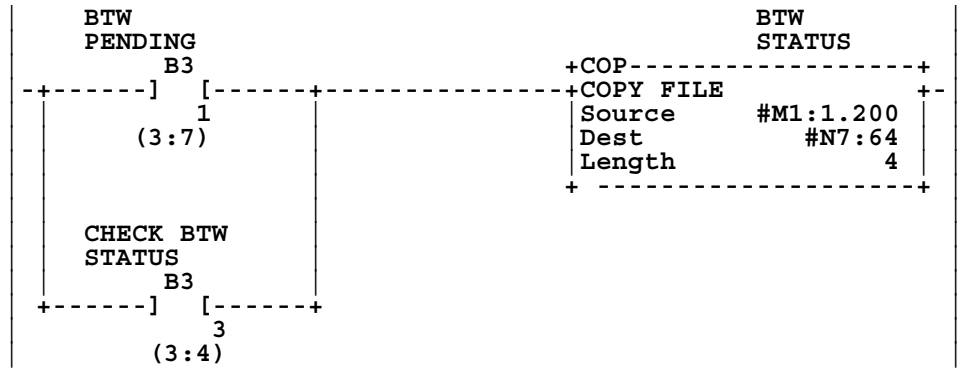


```
B3/1
      -] [- 3:3
      -(L)- 3:8
      -(U)- 3:7

B3/3
      -] [- 3:3
      -(L)- 3:7
      -(U)- 3:4

M1:1.200
      -COP- 3:3
N7:64
      -COP- 3:3

Rung 3:4
UNLATCH THE BIT THAT CONTINUES TO CHECK THE BTW STATUS. WHEN A
BTW IS COMPLETE, THE DONE OR ERROR BIT IS SET. THE LADDER
PROGRAM MUST THEN UNLATCH THE ENABLER BIT, THEN WAIT FOR THE
SN MODULE TO TURN OFF THE DONE/ERROR BIT BEFORE ANOTHER BTW TO
THE SAME M-FILE LOCATION CAN BE INITIATED. THIS COMPLETES THE
ONE BTW CYCLE.
```

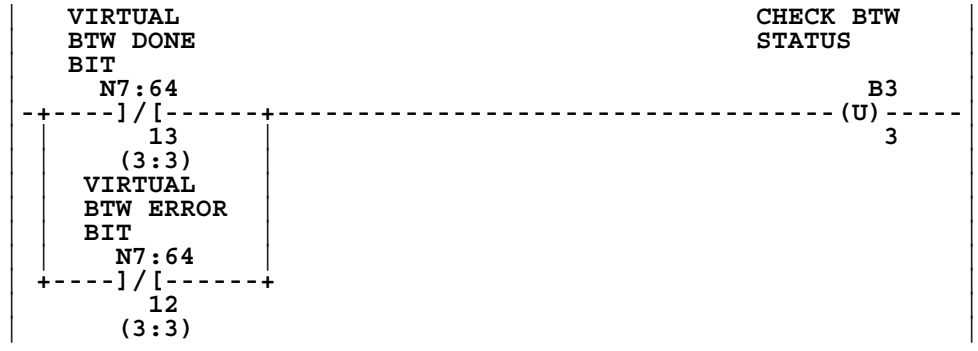


```
B3/3
      -] [- 3:3
      -(L)- 3:7
      -(U)- 3:4

N7:64/12
      -] [- 3:7  3:11
      -]/[- 3:4  3:8

N7:64/13
      -] [- 3:7  3:11
      -]/[- 3:4  3:8
```

```
Rung 3:5
WHEN A BTR SUCCESSFULLY COMPLETES, BUFFER THE DATA AND UNLATCH
BOTH THE VIRTUAL BTR ENABLE BIT AND THE BTR PENDING BIT. ALSO,
LATCH ATHE BIT THAT CONTINUES CHECKING THE BTR STATUS UNTIL
THE SN MODULE TURNS OFF THE DONE BIT.
```

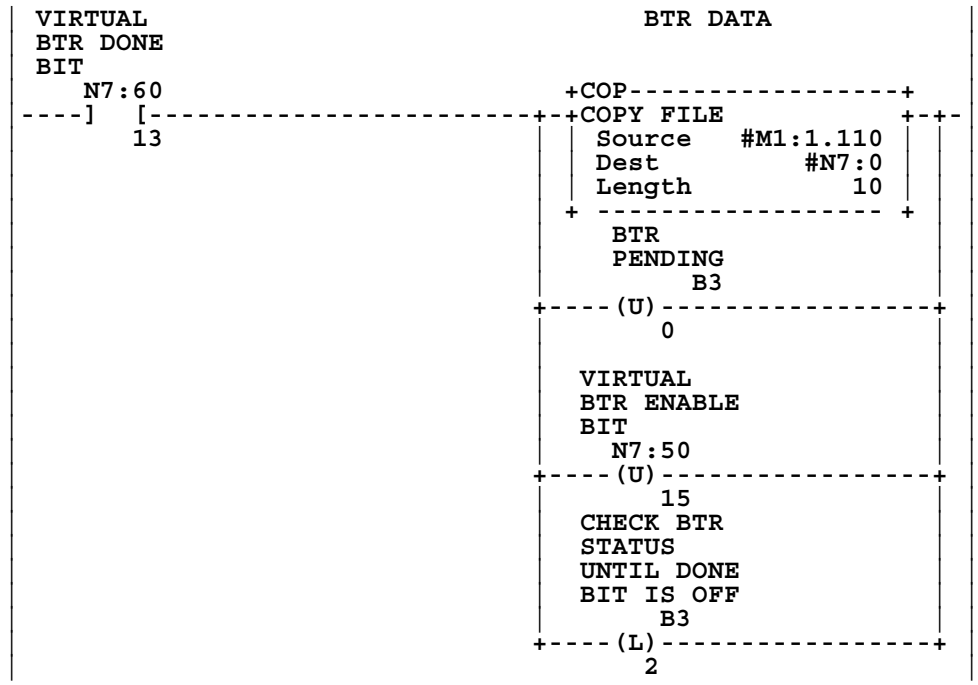


```
B3/0
      -] [- 3:1
      -(L)- 3:9
      -(U)- 3:5  3:6

B3/2
      -] [- 3:1
      -(L)- 3:5  3:6
      -(U)- 3:2

M1:1.110
      -COP- 3:5

N7:0
      -COP- 3:5

N7:50/15
      -] [- 3:10
      -]/[- 3:8  3:9
      -(L)- 3:9
      -(U)- 3:0  3:5  3:6

N7:60/13
      -] [- 3:5  3:10
      -]/[- 3:2  3:9
```

```
Rung 3:6
IF THE BTR FAILS, BUFFER THE BTR ERROR CODE AND UNLATCH THE
BTR ENABLE BIT AND THE BTR PENDING BIT. ALSO, LATCH THE CHECK
BTR STATUS BIT IN ORDER TO CONTINUE READING THE STATUS
INFORMATION FROM THE SCANNER UNTIL IT TURNS THE ERROR BIT OFF,
COMPLETING THE HAND SHAKE PROCESS.
```

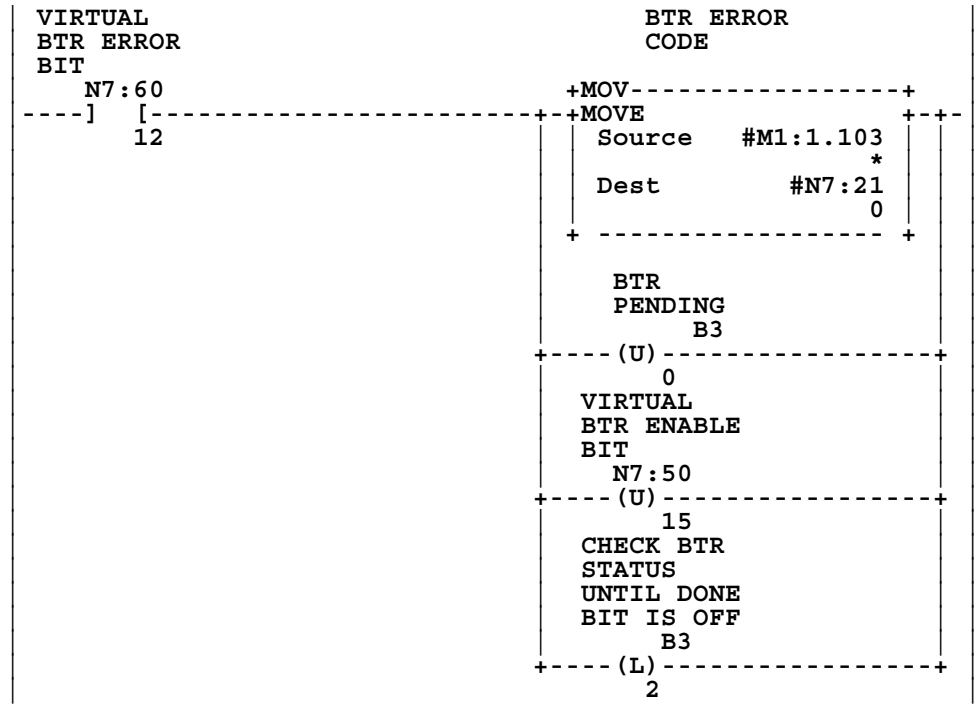


```
B3/0
       -] [- 3:1
       -(L)- 3:9
       -(U)- 3:5  3:6

B3/2
       -] [- 3:1
       -(L)- 3:5  3:6
       -(U)- 3:2

M1:1.103
       -MOV- 3:6

N7:21
       -MOV- 3:6

N7:50/15
       -] [- 3:10
       -]/[- 3:8  3:9
       -(L)- 3:9
       -(U)- 3:0  3:5  3:6

N7:60/12
       -] [-  3:5  3:10
       -]/[-  3:2  3:9
```

```
Rung 3:7
WHEN A BTW FAILS OR COMPLETES, UNLATCH THE BTW ENABLE BIT AND
THE BTW PENDING BIT TO COMPLETE A BTW SEQUENCE. ALSO, LATCH
THE BIT THAT CONTINUES CHECKING THE BTW STATUS UNTIL THE SN
MODULE TURNS THE DONE/ERROR BIT OFF.
```

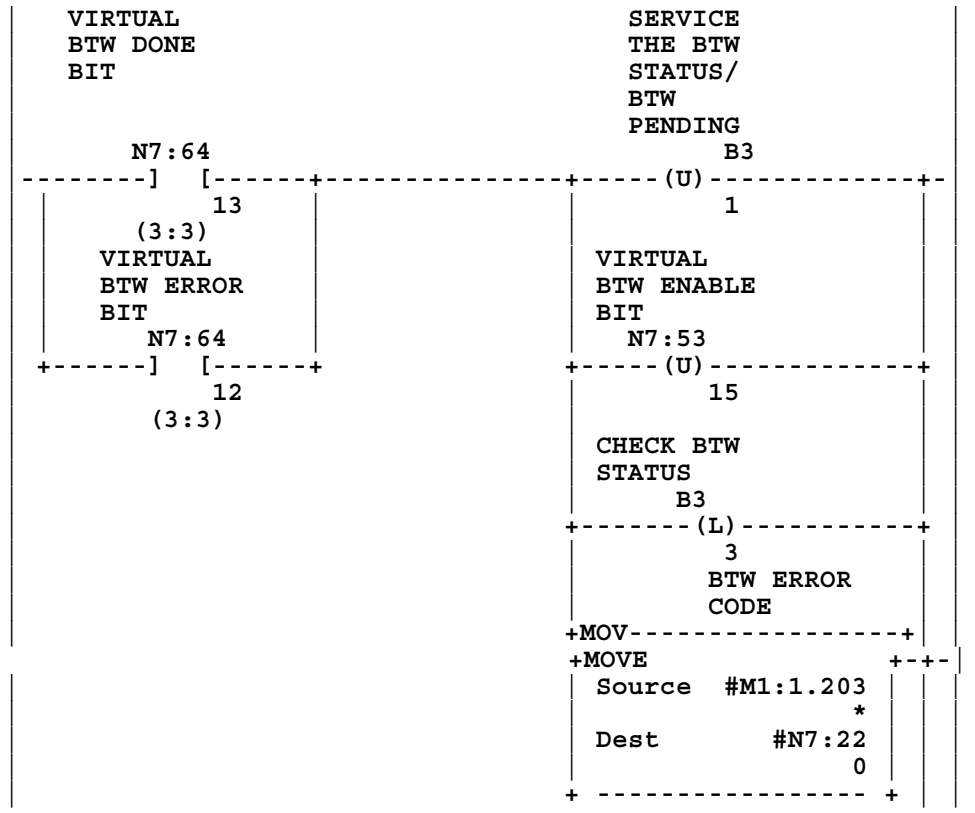


```
B3/1
      -] [- 3:3
      -(L)- 3:8
      -(U)- 3:7

B3/3
      -] [- 3:3
      -(L)- 3:7
      -(U)- 3:4

M1:1.203
      -MOV- 3:7

N7:22
      -MOV- 3:7

N7:53/15
      -] [- 3:11
      -]/[- 3:8  3:9
      -(L)- 3:8
      -(U)- 3:7

N7:64/13
      -] [- 3:7  3:11
      -]/[- 3:4  3:8
```

```
Rung 3:8
THIS RUNG AND THE NEXT ONE WILL TOGGLE BETWEEN EXECUTING A BTW
AND BTR WHILE THE USER SUPPLIED BT PRECONDITION BITS (B3/11
AND B3/12) ARE SET.

| BT PRECON-|VIRTUAL    | VIRTUAL   | VIRTUAL   | VIRTUAL
| DITION BIT|BTR ENABLE|BTW ENABLE|BTW DONE   |BTW ERROR
|           |BIT        |BIT        |BIT        |BIT
|    B3       N7:50        N7:53     N7:64      N7:64        >
|----] [-------]/[----------]/[-------]/[--------]/[--------->
|      11        15           15        13         12        >
|              (3:0)        (3:7)     (3:3)      (3:3)
|
|
|
|
|
|
|                                          BTW DATA          |
|                                <    +COP-----------------+   |
|                                 --+-+COPY FILE           +-+-|
|                                <  | | Source      #N11:0 | | |
|                                <  | | Dest     #MO:1.210 | | |
|                                   | | Length          64 | | |
|                                   | + ------------------ + | |
|                                   |                        | |
|                                   | BTW                    | |
|                                   | PENDING                | |
|                                   |       B3               | |
|                                   +----(L)-----------------+ |
|                                   |       1                | |
|                                   |                        | |
|                                   |  VIRTUAL               | |
|                                   |  BTW ENABLE            | |
|                                   |  BIT                   | |
|                                   |    N7:53               | |
|                                   +----(L)-----------------+ |
|                                          15
B3/1
      -] [-  3:3
      -(L)-  3:8
      -(U)-  3:7

B3/11
      -] [-  3:8

MO:1.210
      -] [- 3:10
      -]/[- 3:8  3:9
      -(L)- 3:9
      -(U)- 3:0  3:5  3:6

N7:53/15
      -] [- 3:11
      -]/[- 3:8  3:9
      -(L)- 3:8
      -(U)- 3:7

N7:64/12
      -] [- 3:7  3:11
      -]/[- 3:4  3:8

N7:64/13
      -] [- 3:7  3:11
      -]/[- 3:4  3:8

N11:0
      -COP-  3:8
```

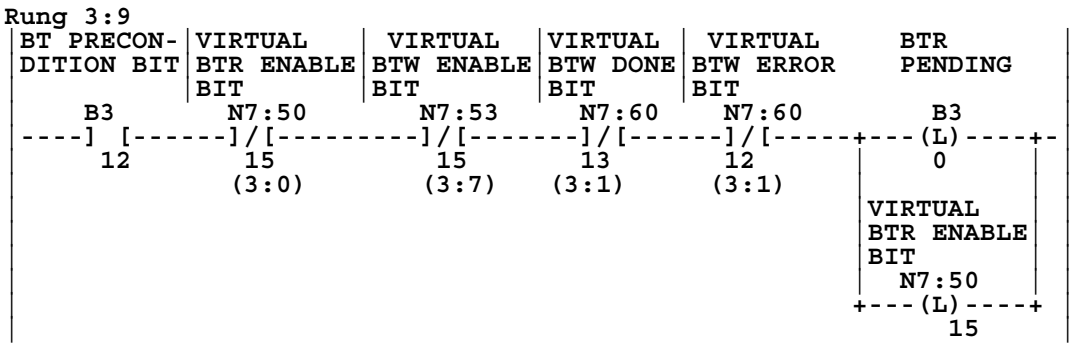


```
B3/0
      -] [-  3:1
      -(L)-  3:9
      -(U)-  3:5  3:6

B3/12
      -] [-  3:9

N7:50/15
      -] [- 3:10
      -]/[- 3:8  3:9
      -(L)- 3:9
      -(U)- 3:0  3:5  3:6

N7:53/15
      -] [- 3:11
      -]/[- 3:8  3:9
      -(L)- 3:8
      -(U)- 3:7

N7:60/12
      -] [- 3:6  3:10
      -]/[- 3:2  3:9

N7:60/13
      -] [- 3:5  3:10
      -]/[- 3:2  3:9
```

```
Rung 3:10
MOVE THE VIRTUAL BTR CONTROL WORD TO THE MO FILE FOR THE SN
MODULE WHILE A BTR IS IN PROGRESS, AND CONTINUE DOING SO UNTIL
THE ENABLE/DONE/ERROR BITS ARE ALL OFF.
```

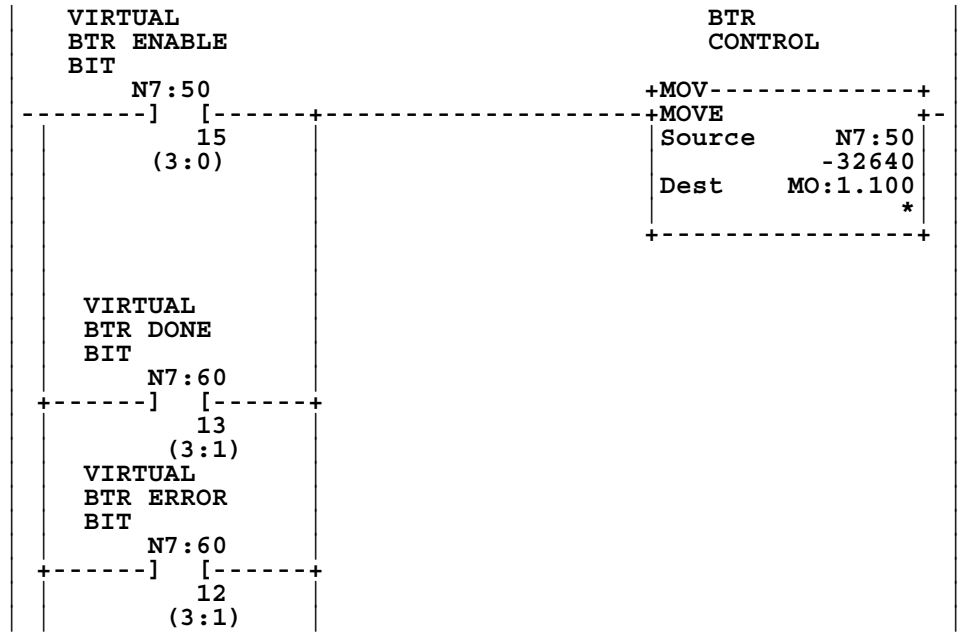


```
MO:1.100
      -COP-  3:0
      -MOV-  3:10

N7:50
      -COP-  3:0
      -MOV-  3:10

N7:50/15
      -] [- 3:10
      -]/[- 3:8  3:9
      -(L)- 3:9
      -(U)- 3:0  3:5  3:6

N7:60/12
      -] [- 3:6  3:10
      -]/[- 3:2  3:9

N7:60/13
      -] [- 3:5  3:10
      -]/[- 3:2  3:9
```

```
Rung 3:11
MOVE THE VIRTUAL BTW CONTROL WORD TO THE MO FILE FOR THE SN
MODULE WHILE A BTW IS IN PROGRESS, AND CONTINUE DOING SO UNTIL
THE ENABLE/DONE/ERROR BITS ARE ALL OFF.
```

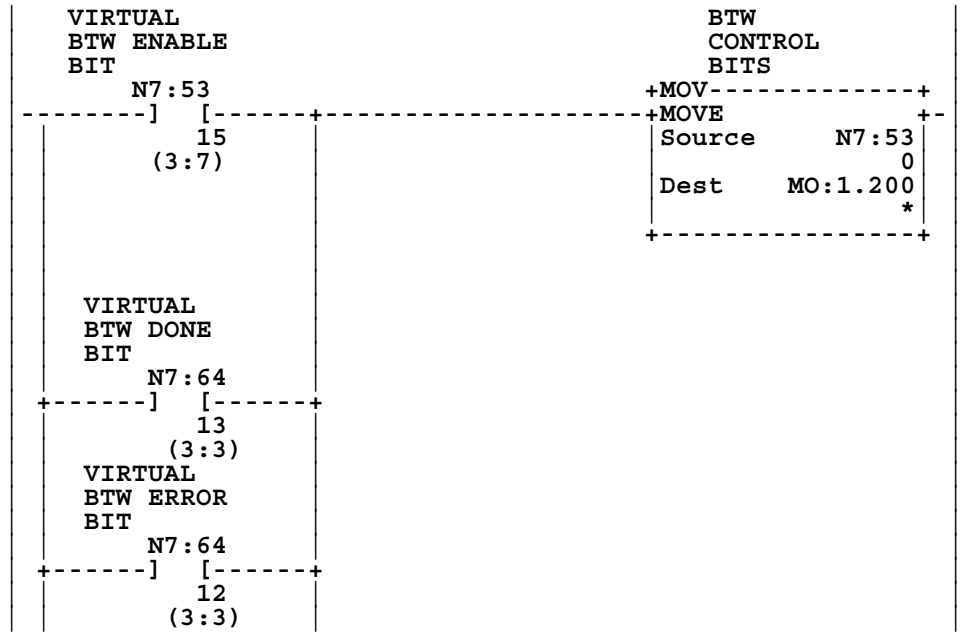


```
MO:1.200
      -COP-  3:0
      -MOV-  3:11

N7:53
      -COP-  3:0
      -MOV-  3:11

N7:53/15
      -] [- 3:11
      -]/[- 3:8  3:9
      -(L)- 3:8
      -(U)- 3:7

N7:64/12
      -] [- 3:7  3:11
      -]/[- 3:4  3:8

N7:64/13
      -] [- 3:7  3:11
      -]/[- 3:4  3:8
```

```
Rung 3:12
 |-------------------------+END+---------------------------|

 1747-SN G File Screen Dump

address   15      data            0     address  data     0
G1:0      0010    0000    0010    0000
G1:1      0000    0000    0000    0001
G1:2      0000    0000    0000    0011
G1:3      0000    0000    0000    0000
```

```
Data Table                  Processor File: METTLER.ACH         Data Table File S2
ARITHMETIC FLAGS     S:0          Z:0    V:0    C:0

PROCESSOR STATUS     00000000  00000000      SUSPEND CODE                          0
PROCESSOR STATUS     00000000  10000110      SUSPEND FILE                          0
PROCESSOR STATUS     10010000  00010010
                                             WATCHDOG                 [x10 ms]: 10
MINOR FAULT          01000000  00000000      LAST SCAN                [x10 ms]:  1
FAULT CODE                        0000      FREE RUNNING CLOCK  00001101 11101000
FAULT DESCRIPTION:

MATH REGISTER           0000 0000

ACTIVE NODE LIST        (CHANNEL 1)          I/O SLOT ENABLES

0          10         20         30         0         10          20         30
11000000 00000000 00000000 00000000         11111111 11111111 11111111 11111111

PROCESSOR BAUD RATE (CHANNEL 1) 19200       PROCESSOR ADDRESS   (CHANNEL 1)    1

LAST SCAN            [x01 ms]:   6          I/O SLOT INTERRUPT ENABLES
LAST SCAN            [x10 ms]:   1          0         10         20         30
1 ms TIMEBASE (SCAN Times)       0          11111111 11111111 11111111 11111111
AVERAGE SCAN         [x10 ms]:   0
MAXIMUM SCAN         [x10 ms]:   6
                                            I/O SLOT INTERRUPT PENDING
INDEX REGISTER VALUE:                       0     0       10        20        30
INDEX ACROSS FILES:       NO                00000000 00000000 00000000 00000000

FAULT ROUTINE SUBROUTINE FILE:   0          I/O INTERRUPT FILE EXEC:

SELECTABLE TIMED INTERRUPT                  SINGLE STEP TEST           FILE  RUNG
  SUBROUTINE FILE:               0          START STEP ON:                2     0
  SETPOINT           [x10 ms]:   0          END STEP BEFORE:              0     0
  ENABLED:                       1          FAULT/POWER DOWN:             3     9
  EXECUTING:                     0          COMPILED FOR SINGLE STEP:          YES
  PENDING:                       0
  1 ms TIMEBASE                  0          STI LOST:                          0
```

```
Data Table                  Processor File: METTLER.ACH         Data Table File S2

EXT PROCESSOR STATUS 00000010 00000000 REAL TIME CLOCK DATE:   03-13-1997
EXT MINOR FAULT         00000000 00000000                    TIME:     03:23:39

DISCRETE INPUT INTERRUPT
  SUBROUTINE FILE:               0     MASK:                    00000000
  INPUT SLOT:                    0     COMPARE VALUE:           00000000
  ENABLED:                       1     PRESET:                         0
  EXECUTING:                     0     RETURN MASK:             00000000
  PENDING:                       0     ACCUMULATOR:                    0
  OVERFLOW:                      0     LAST SCAN [ms]:                 0
  LOST:                          0     MAX. SCAN [ms]:                 0

PROCESSOR                          OPERATING SYSTEM        USER PROGRAM
  CATALOG #:          532      CATALOG #:      300           FUNCTIONAL TYPE:   1
  SERIES:               B      SERIES:         A             FUNCTIONAL INDEX: 65
  REVISION:             2      F.R.N.:         2
  USER RAM SIZE:       64
  FLASH EEPROM SIZE: 480
                                   EXT PROCESSOR STATUS:  00000000 00000000
CHANNEL 0 ACTIVE NODE TABLE

       0         10         20         30
  0- 31  00000000 00000000 00000000 00000000
 32- 63  00000000 00000000 00000000 00000000
 64- 95  00000000 00000000 00000000 00000000       10 us DII TIMER:     0
 96-127  00000000 00000000 00000000 00000000       10 us STI TIMER:     0
128-159  00000000 00000000 00000000 00000000       10 us I/O TIMER:     0
160-191  00000000 00000000 00000000 00000000
192-223  00000000 00000000 00000000 00000000
224-255  00000000 00000000 00000000 00000000

Data Table                  Processor File: METTLER.ACH         Data Table File N7

Address  Data  (Radix=DECIMAL)
   N7:0    8224     8311    2975    12592   17780   -24576   8224    8300    26996   12337
   N7:10   0        16705   0       0       0       0        0       0       0       8224
   N7:20   0        0       0       0       0       0        0       0       0       0
   N7:30   0        0       0       0       0       0        0       0       0       0
   N7:40   0        0       0       0       0       0        0       0       0       0
   N7:50   -32640   64      0       0       64      0        0       0       0       0
   N7:60   17408    0       0       0       0       0        0       0       0       0
   N7:70   0        0       0       0       0       47       0       0       0       0
```

N7 SCREEN DUMP (ASCII)

| address | 0 | 1 | 2 | 3 | 4 | 5 | 6 | 7 | 8 | 9 |
|---|---|---|---|---|---|---|---|---|---|---|
| N7:0 | | w | t 1 | 1 0 | E t | \A0/00 | | 1 | j t | 0 1 |
| N7:10 | \00\00 | A A | \00\00 | \00\00 | \00\00 | \00\00 | \00\00 | \00\00 | \00\00 | \00\00 |
| N7:20 | \00\00 | \00\00 | \00\00 | \00\00 | \00\00 | \00\00 | \00\00 | \00\00 | \00\00 | \00\00 |
| N7:30 | \00\00 | \00\00 | \00\00 | \00\00 | \00\00 | \00\00 | \00\00 | \00\00 | \00\00 | \00\00 |
| N7:40 | \00\00 | \00\00 | \00\00 | \00\00 | \00\00 | \00\00 | \00\00 | \00\00 | \00\00 | \00\00 |
| N7:50 | \80\80 | \00 @ | \00\00 | \00\00 | \00 @ | \00\00 | \00\00 | \00\00 | \00\00 | \00\00 |
| N7:60 | D \00 | \00\00 | \00\00 | \00\00 | \00\00 | \00 / | \00\00 | \00\00 | \00\00 | \00\00 |
| N7:70 | \00\00 | \00\00 | \00\00 | \00\00 | | | | | | |

Data Table Processor File: METTLER.ACH Data Table File N10

| Address | Data | (Radix=DECIMAL) | | | | | | | |
|---|---|---|---|---|---|---|---|---|---|
| N10:0 | 2 | 0 | 3 | 0 | 0 | 0 | 0 | 0 | 1 | 3 |
| N10:10 | 0 | 0 | 0 | 0 | 0 | 0 | 0 | 0 | 0 | 0 |
| N10:20 | 0 | 0 | 0 | 0 | 0 | 0 | 0 | 0 | 0 | 0 |
| N10:30 | 0 | 0 | | | | | | | | |

Data Table Processor File: METTLER.ACH Data Table File N11

| Address | Data | (Radix=DECIMAL) | | | | | | | | |
|---|---|---|---|---|---|---|---|---|---|---|
| N11:0 | 0 | 0 | 3 | 0 | 0 | 0 | 0 | 0 | 1 | 3 |
| N11:10 | 8307 | 28721 | 12341 | 0 | 0 | 8224 | 8300 | 26996 | 12338 | 0 |
| N11:20 | 0 | 0 | 0 | 0 | 0 | 0 | 0 | 0 | 0 | 0 |
| N11:30 | 0 | 0 | 0 | 0 | 0 | 0 | 0 | 0 | 0 | 8224 |
| N11:40 | 8311 | 29745 | 12592 | 8224 | 8300 | 26996 | 12337 | 0 | 0 | 0 |
| N11:50 | 0 | 0 | 0 | 0 | 0 | 0 | 0 | 0 | 0 | 0 |
| N11:60 | 0 | 0 | 0 | 0 | 0 | 0 | 0 | 0 | 0 | 0 |
| N11:70 | 0 | 0 | 0 | 0 | 0 | 0 | 0 | 0 | 0 | 0 |
| N11:80 | 0 | 0 | 0 | 0 | 0 | 0 | 0 | 0 | 0 | 0 |
| N11:90 | 0 | 0 | 0 | 0 | 0 | 0 | 0 | 0 | 0 | 0 |
| N11:100 | 0 | | | | | | | | | |

Data Table Processor File: METTLER.ACH Data Table File N12

| Address | Data | (Radix=DECIMAL) | | | | | | | | |
|---|---|---|---|---|---|---|---|---|---|---|
| N12:0 | 8224 | 8311 | 29745 | 12592 | 17880 | -24576 | 8224 | 8300 | 26996 | 12337 |
| N12:10 | 19276 | 20291 | 19278 | 17746 | 8272 | 17742 | 21550 | 8224 | 0 | 0 |
| N12:20 | 0 | 0 | 0 | 0 | 0 | 0 | 0 | 0 | 12336 | 8224 |
| N12:30 | 0 | 0 | 0 | 0 | 0 | 0 | 0 | 0 | 0 | 8224 |
| N12:40 | 8311 | 29745 | 12592 | 8224 | 8300 | 26996 | 12337 | 0 | 0 | 0 |
| N12:50 | 0 | 0 | 0 | 0 | 0 | 0 | 0 | 0 | 0 | 0 |
| N12:60 | 0 | 0 | 0 | 0 | 0 | 0 | 0 | 0 | 0 | 0 |
| N12:70 | 0 | 0 | 0 | 0 | 0 | 0 | 0 | 0 | 0 | 0 |
| N12:80 | 0 | 0 | 0 | 0 | 0 | 0 | 0 | 0 | 0 | 0 |
| N12:90 | 0 | 0 | 0 | 0 | 0 | 0 | 0 | 0 | 0 | 0 |
| N12:100 | 0 | | | | | | | | | |

# PLC-5 Block Transfer Program Example

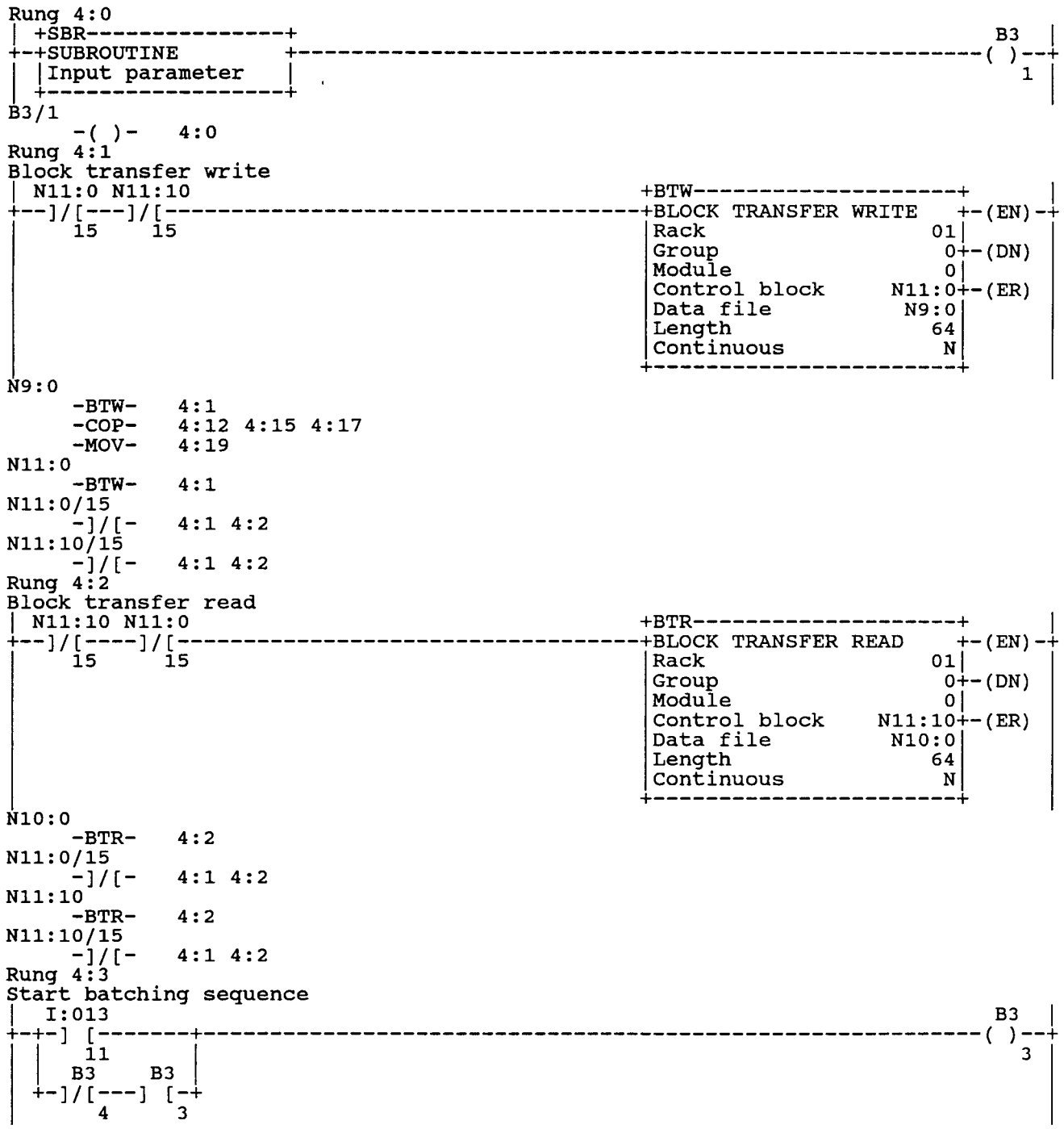

```
B3/3
     -] [-   3:1 3:2 3:3 3:4 3:6 3:7 3:10 4:3 4:4 4:5 4:6 4:11
     -]/[-   3:13 4:19
     -( )-   3:1 4:3
B3/4
     -] [-   3:13 4:19
     -]/[-   3:1 3:2 3:5 4:3 4:4 4:7 4:13 4:16
     -( )-   3:12 4:18
I:013/11
     -] [-   4:3
Rung 4:4
Checks to see if scale = 0
|   B3  +EQU---------------+                                                  B3  |
+--] [-++EQUAL             ++-------------------------------------------( )--+
|     3||Source A  0.000000||                                                 2  |
|      ||                  ||                                                    |
|      ||Source B     F8:12||                                                    |
|      ||          1.000000||                                                    |
|      |+------------------+|                                                    |
|      |+GRT---------------+|                                                    |
|      ++GREATER THAN      ++                                                    |
|      ||Source A     F8:12||                                                    |
|      ||          1.000000||                                                    |
|      ||Source B     F18:1||                                                    |
|      ||          10.00000||                                                    |
|      |+------------------+|                                                    |
|      |  B3    B3          |                                                    |
|      +-] [---]/[----------+                                                    |
|           2     4                                                              |
B3/2
     -] [-   3:2 3:4 4:4 4:6
     -]/[-   3:3 4:5
     -( )-   3:2 4:4
B3/3
     -] [-   3:1 3:2 3:3 3:4 3:6 3:7 3:10 4:3 4:4 4:5 4:6 4:11
     -]/[-   3:13 4:19
     -( )-   3:1 4:3
B3/4
     -] [-   3:13 4:19
     -]/[-   3:1 3:2 3:5 4:3 4:4 4:7 4:13 4:16
     -( )-   3:12 4:18
F8:12
     -CPT-   2:1 2:2 2:4 2:5 2:6 2:7
     -EQU-   3:2 3:7 4:4
     -GEQ-   2:11 2:13 4:17
     -GRT-   3:2 4:4 4:14
     -LEQ-   3:3 3:12 4:5 4:14 4:18
     -NEQ-   3:3 4:5
F18:1
     -GEQ-   2:11 2:13 4:17
     -GRT-   3:2 4:4
     -LEQ-   3:3 3:12 4:5 4:18
```

```
Rung 4:5
Zeros scale if not zero and within acceptable zero range
|   B3  +NEQ---------------+ +LEQ---------------+   B3                    O:013 |
+--] [--+NOT EQUAL         +-+LESS THAN OR EQUAL+--]/[--------------------( )--+
|     3 |Source A  0.000000| |Source A     F8:12|     2                      07 |
|       |                  | |           1.000000|                                |
|       |Source B     F8:12| |Source B     F18:1|                                |
|       |          1.000000| |           10.00000|                                |
|       +------------------+ +------------------+                                |
B3/2
     -] [-   3:2 3:4 4:4 4:6
     -]/[-   3:3 4:5
     -( )-   3:2 4:4
B3/3
     -] [-   3:1 3:2 3:3 3:4 3:6 3:7 3:10 4:3 4:4 4:5 4:6 4:11
     -]/[-   3:13 4:19
     -( )-   3:1 4:3
F8:12
     -CPT-   2:1 2:2 2:4 2:5 2:6 2:7
     -EQU-   3:2 3:7 4:4
     -GEQ-   2:11 2:13 4:17
     -GRT-   3:2 4:4 4:14
     -LEQ-   3:3 3:12 4:5 4:14 4:18
     -NEQ-   3:3 4:5
F18:1
     -GEQ-   2:11 2:13 4:17
     -GRT-   3:2 4:4
     -LEQ-   3:3 3:12 4:5 4:18
O:013/07
     -( )-   4:5
Rung 4:6
|   B3    B3    B3                                          +MOV---------------+  |
+--] [---] [---]/[-----------------------------------------++MOVE              ++-+
|     3     2     5                                        ||Source      N11:20||  |
|                                                          ||                250||  |
|                                                          ||Destination  O:012||  |
|                                                          ||                250||  |
|                                                          |+------------------+|  |
|                                                          |                O:013|  |
|                                                          +----------------( )-+  |
|                                                                            03    |
B3/2
     -] [-   3:2 3:4 4:4 4:6
     -]/[-   3:3 4:5
     -( )-   3:2 4:4
B3/3
     -] [-   3:1 3:2 3:3 3:4 3:6 3:7 3:10 4:3 4:4 4:5 4:6 4:11
     -]/[-   3:13 4:19
     -( )-   3:1 4:3
B3/5
     -] [-   3:6 3:7 4:11
     -]/[-   3:4 4:6
     -( )-   3:5 4:7
N11:20
     -MOV-   3:4 4:6
```

```
O:012
     -MOV-   4:6
O:013/03
     -( )-   4:6
Rung 4:7
Checks for net mode bit then turns on tare complete
| I:013   B3    B3                                                          B3   |
+--] [---]/[---]/[-------------  ---------------------------------+-------( )-+-+
|    15     4     8                                                 |          5| |
|                                                                   |O:013 O:013| |
|                                                                   +-]/[---( )-+ |
|                                                                       17    00  |
B3/4
     -] [-   3:13 4:19
     -]/[-   3:1 3:2 3:5 4:3 4:4 4:7 4:13 4:16
     -( )-   3:12 4:18
B3/5
     -] [-   3:6 3:7 4:11
     -]/[-   3:4 4:6
     -( )-   3:5 4:7
B3/8
     -] [-   2:11 2:12 2:13 3:10 3:11 3:12 4:16 4:17 4:18
     -]/[-   2:13 3:4 3:8 4:7 4:12 4:13 4:15
     -( )-   3:10 4:16
I:013/15
     -] [-   4:7 4:17
O:013/00
     -( )-   4:7
O:013/17
     -]/[-   4:7
Rung 4:8
Uses BTW to load values into SP1, preact 1, SP2, and preact 2
|   B3                                                  B3  +COP---------------+  |
+--] [---------------------------------------------+-]/[--+COPY FILE          ++-+
|    11                                             |    6 |Source     #N12:30|| |
|                                                   |      |Destination  #N9:9|| |
|                                                   |      |Length           4|| |
|                                                   |      +------------------+| |
|                                                   |  B3  +COP---------------+| |
|                                                   +-]/[--+COPY FILE          ++ |
|                                                   |    6 |Source       #F8:3|| |
|                                                   |      |Destination #N9:13|| |
|                                                   |      |Length           2|| |
|                                                   |      +------------------+| |
|                                                   |                        B3 | |
|                                                   +----------------------( )-+ |
|                                                                             6  |
B3/6
     -] [-   3:7 3:8 4:12 4:13
     -]/[-   3:6 4:8 4:8
     -( )-   3:7 4:8
B3/11
     -] [-   4:8
     -]/[-   4:9 4:9
     -( )-   4:9
```

```
F8:3
     -COP-   4:8
N9:9
     -COP-   4:8 4:9 4:10 4:11
N9:13
     -COP-   4:8 4:9 4:10 4:11
N12:30
     -COP-   4:8
Rung 4:9
Uses BTW to load values into SP1, preact 1, SP2, and preact 2
```

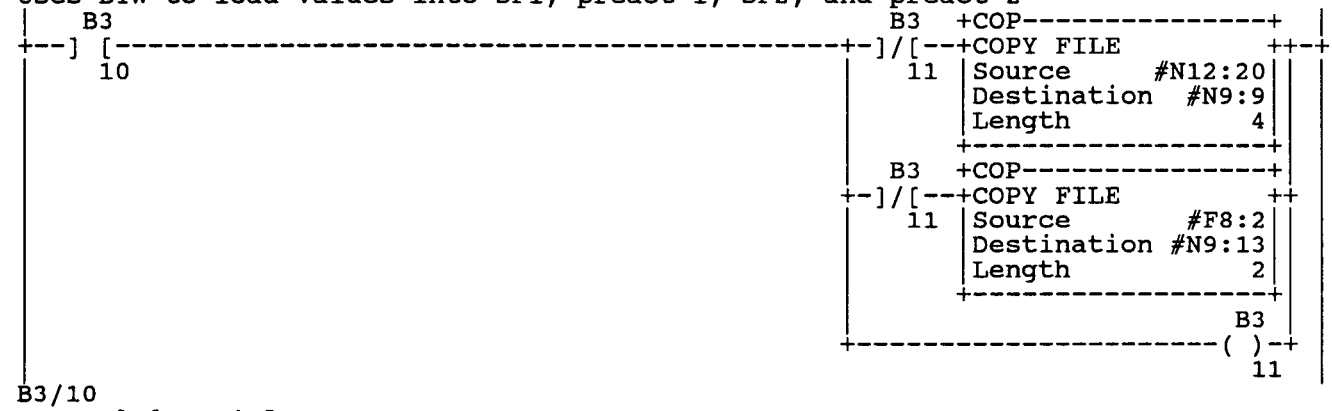


```
B3/10
     -] [-   4:9
     -]/[-   4:10 4:10
     -( )-   4:10
B3/11
     -] [-   4:8
     -]/[-   4:9 4:9
     -( )-   4:9
F8:2
     -COP-   4:9
N9:9
     -COP-   4:8 4:9 4:10 4:11
N9:13
     -COP-   4:8 4:9 4:10 4:11
N12:20
     -COP-   4:9
```

```
Rung 4:10
Uses BTW to load values into SP1, preact 1, SP2, and preact 2
|   B3                                                  B3  +COP---------------+  |
+--] [-----------------------------------------------+-]/[--+COPY FILE         ++-+
|     9                                               |   10 |Source     #N12:10|| |
|                                                     |      |Destination  #N9:9|| |
|                                                     |      |Length           4|| |
|                                                     |      +------------------+| |
|                                                     |  B3  +COP---------------+| |
|                                                     +-]/[--+COPY FILE         ++ |
|                                                     |   10 |Source       #F8:1|| |
|                                                     |      |Destination #N9:13|| |
|                                                     |      |Length           2|| |
|                                                     |      +------------------+| |
|                                                     |                       B3 | |
|                                                     +----------------------( )-+ |
|                                                                              10  |
B3/9
     -] [-   4:10
     -]/[-   4:11 4:11
     -( )-   4:11
B3/10
     -] [-   4:9
     -]/[-   4:10 4:10
     -( )-   4:10
F8:1
     -COP-   4:10
N9:9
     -COP-   4:8 4:9 4:10 4:11
N9:13
     -COP-   4:8 4:9 4:10 4:11
N12:10
     -COP-   4:10
Rung 4:11
Uses BTW to load values into SP1, preact 1, SP2, and preact 2
|   B3    B3                                            B3  +COP---------------+  |
+--] [---] [-------------------------------------------+-]/[--+COPY FILE         ++-+
|     3     5                                         |    9 |Source      #N12:0|| |
|                                                     |      |Destination  #N9:9|| |
|                                                     |      |Length           4|| |
|                                                     |      +------------------+| |
|                                                     |  B3  +COP---------------+| |
|                                                     +-]/[--+COPY FILE         ++ |
|                                                     |    9 |Source       #F8:0|| |
|                                                     |      |Destination #N9:13|| |
|                                                     |      |Length           2|| |
|                                                     |      +------------------+| |
|                                                     |                       B3 | |
|                                                     +----------------------( )-+ |
|                                                                               9  |
B3/3
     -] [-   3:1 3:2 3:3 3:4 3:6 3:7 3:10 4:3 4:4 4:5 4:6 4:11
     -]/[-   3:13 4:19
     -( )-   3:1 4:3
B3/5
```

```
B3/5
     -] [-   3:6 3:7 4:11
     -]/[-   3:4 4:6
     -( )-   3:5 4:7
B3/9
     -] [-   4:10
     -]/[-   4:11 4:11
     -( )-   4:11
F8:0
     -COP-   4:11
N9:9
     -COP-   4:8 4:9 4:10 4:11
N9:13
     -COP-   4:8 4:9 4:10 4:11
N12:0
     -COP-   4:11
Rung 4:12
Turns on PAR 2.1 to start feed of Material 1
|   B3    B3    B3   B17  I:013                                        O:013  |
+--] [---]/[---]/[-+-]/[---] [-+-------------------------+----------------( )-+-+
|     6     8    12|     0    00|                         |                 14| |
|                  | B17  I:013|                         |+COP--------------+| |
|                  +-] [---] [-+                         ++COPY FILE        ++ |
|                       0    05                           |Source      #N16:0|  |
|                                                         |Destination  #N9:0|  |
|                                                         |Length            9|  |
|                                                         +------------------+  |
B3/6
     -] [-   3:7 3:8 4:12 4:13
     -]/[-   3:6 4:8 4:8
     -( )-   3:7 4:8
B3/8
     -] [-   2:11 2:12 2:13 3:10 3:11 3:12 4:16 4:17 4:18
     -]/[-   2:13 3:4 3:8 4:7 4:12 4:13 4:15
     -( )-   3:10 4:16
B3/12
     -] [-   4:13 4:14
     -]/[-   4:12
     -( )-   4:13
B17/0
     -] [-   2:0 2:1 2:2 2:3 2:4 2:5 3:10 4:12 4:13 4:15 4:16
     -]/[-   2:6 2:7 3:10 4:12 4:13 4:15 4:16
I:013/00
     -] [-   4:12
     -]/[-   4:13
I:013/05
     -] [-   4:12
     -]/[-   4:13
N9:0
     -BTW-   4:1
     -COP-   4:12 4:15 4:17
     -MOV-   4:19
N16:0
     -COP-   4:12
O:013/14
```

```
O:013/14
     -] [-   2:11 2:12 2:13
     -( )-   4:12
Rung 4:13
Setpoint 1 feed done
|    B3    B3   B17  I:013                                                  B3  |
+-+-] [---]/[-+-]/[---]/[-++-------------------------------------------( )--+
| |     6    8|    0    00||                                             12  |
| |           | B17  I:013||                                                 |
| |           +-] [---]/[-+|                                                 |
| |                 0    05 |                                                 |
| |  B3    B3               |                                                 |
| +-] [---]/[---------------+                                                 |
|     12     4                                                                |
B3/4
     -] [-   2:13 4:19
     -]/[-   2:1 3:2 3:5 4:3 4:4 4:7 4:13 4:16
     -( )-   3:12 4:18
B3/6
     -] [-   3:7 3:8 4:12 4:13
     -]/[-   3:6 4:8 4:8
     -( )-   3:7 4:8
B3/8
     -] [-   2:11 2:12 2:13 3:10 3:11 3:12 4:16 4:17 4:18
     -]/[-   2:13 3:4 3:8 4:7 4:12 4:13 4:15
     -( )-   3:10 4:16
B3/12
     -] [-   4:13 4:14
     -]/[-   4:12
     -( )-   4:13
B17/0
     -] [-   2:0 2:1 2:2 2:3 2:4 2:5 3:10 4:12 4:13 4:15 4:16
     -]/[-   2:6 2:7 3:10 4:12 4:13 4:15 4:16
I:013/00
     -] [-   4:12
     -]/[-   4:13
I:013/05
     -] [-   4:12
     -]/[-   4:13
```

Rung 4:14
Uses discrete write tare bit to tare first material weight

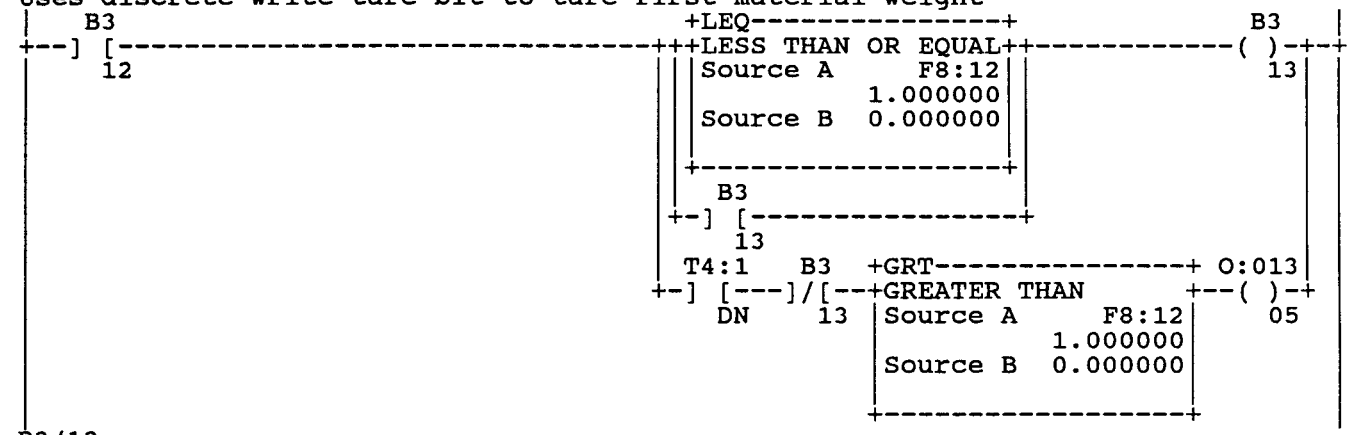


B3/12
-] [- 4:13 4:14
-]/[- 4:12
-( )- 4:13
B3/13
-] [- 4:14 4:15 4:16
-]/[- 4:14
-( )- 4:14
F8:12
-CPT- 2:1 2:2 2:4 2:5 2:6 2:7
-EQU- 3:2 3:7 4:4
-GEQ- 2:11 2:13 4:17
-GRT- 3:2 4:4 4:14
-LEQ- 3:3 3:12 4:5 4:14 4:18
-NEQ- 3:3 4:5
O:013/05
-( )- 4:14
T4:1
-TON- 2:9
T4:1.DN
-] [- 4:14
-]/[- 2:9

Rung 4:15
Turns on PAR 2.2 to start Material 2 feed

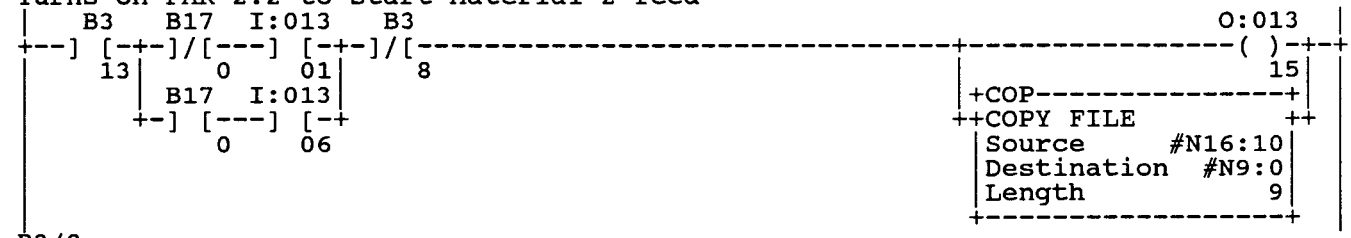


B3/8
-] [- 2:11 2:12 2:13 3:10 3:11 3:12 4:16 4:17 4:18
-]/[- 2:13 3:4 3:8 4:7 4:12 4:13 4:15

```
B3/8
     -( )-   3:10 4:16
B3/13
     -] [-   4:14 4:15 4:16
     -]/[-   4:14
     -( )-   4:14
B17/0
     -] [-   2:0 2:1 2:2 2:3 2:4 2:5 3:10 4:12 4:13 4:15 4:16
     -]/[-   2:6 2:7 3:10 4:12 4:13 4:15 4:16
I:013/01
     -] [-   4:15
     -]/[-   4:16
I:013/06
     -] [-   4:15
     -]/[-   4:16
N9:0
     -BTW-   4:1
     -COP-   4:12 4:15 4:17
     -MOV-   4:19
N16:10
     -COP-   4:15
O:013/15
     -] [-   2:11 2:12 2:13
     -( )-   4:15
Rung 4:16
Checks the discrete setpoint input bit for feed done
|     B3   B17  I:013                                                    B3  |
+-+-] [-+-]/[---]/[-++-------------------------------------------------( )--+
| |    13|     0    01||                                                  8  |
| |      | B17  I:013||                                                     |
| |      +-] [---]/[-+|                                                     |
| |             0    06|                                                    |
| |  B3    B3         |                                                     |
| +-] [---]/[--------+                                                     |
|      8     4                                                             |
B3/4
     -] [-   3:13 4:19
     -]/[-   3:1 3:2 3:5 4:3 4:4 4:7 4:13 4:16
     -( )-   3:12 4:18
B3/8
     -] [-   2:11 2:12 2:13 3:10 3:11 3:12 4:16 4:17 4:18
     -]/[-   2:13 3:4 3:8 4:7 4:12 4:13 4:15
     -( )-   3:10 4:16
B3/13
     -] [-   4:14 4:15 4:16
     -]/[-   4:14
     -( )-   4:14
B17/0
     -] [-   2:0 2:1 2:2 2:3 2:4 2:5 3:10 4:12 4:13 4:15 4:16
     -]/[-   2:6 2:7 3:10 4:12 4:13 4:15 4:16
I:013/01
     -] [-   4:15
     -]/[-   4:16
I:013/06
     -] [-   4:15
```

```
I:013/06
     -]/[-   4:16
Rung 4:17
Turns on discrete write clear bit to return scale to gross mode
|   B3                          I:013                                      O:013  |
+--] [-------------------------+-] [-------------------------------------( )-+-+
|     8                        |   15                                      04|  |
|                              |+GEQ--------------------+ +COP---------------+|  |
|                              ++GREATER THAN OR EQUAL  +-+COPY FILE          ++  |
|                               |Source A          F8:12| |Source     #N16:20|  |
|                               |               1.000000| |Destination  #N9:0|  |
|                               |Source B          F18:1| |Length           9|  |
|                               |               10.00000| +------------------+  |
|                               +-----------------------+                       |
B3/8
     -] [-   2:11 2:12 2:13 3:10 3:11 3:12 4:16 4:17 4:18
     -]/[-   2:13 3:4 3:8 4:7 4:12 4:13 4:15
     -( )-   3:10 4:16
F8:12
     -CPT-   2:1 2:2 2:4 2:5 2:6 2:7
     -EQU-   3:2 3:7 4:4
     -GEQ-   2:11 2:13 4:17
     -GRT-   3:2 4:4 4:14
     -LEQ-   3:3 3:12 4:5 4:14 4:18
     -NEQ-   3:3 4:5
F18:1
     -GEQ-   2:11 2:13 4:17
     -GRT-   3:2 4:4
     -LEQ-   3:3 3:12 4:5 4:18
I:013/15
     -] [-   4:7 4:17
N9:0
     -BTW-   4:1
     -COP-   4:12 4:15 4:17
     -MOV-   4:19
N16:20
     -COP-   4:17
O:013/04
     -( )-   4:17
Rung 4:18
Feed sequence complete when feed is done and weight is removed
|   B3  +LEQ---------------+                                                C5:0  |
+--] [--+LESS THAN OR EQUAL+-------------------------------------------+(RES)+-+
|     8 |Source A     F8:12|                                           |     | |
|       |          1.000000|                                           |  B3 | |
|       |Source B     F18:1|                                           +-( )-+ |
|       |          10.00000|                                                 4  |
|       +------------------+                                                    |
B3/4
     -] [-   3:13 4:19
     -]/[-   3:1 3:2 3:5 4:3 4:4 4:7 4:13 4:16
     -( )-   3:12 4:18
B3/8
     -] [-   2:11 2:12 2:13 3:10 3:11 3:12 4:16 4:17 4:18
     -]/[-   2:13 3:4 3:8 4:7 4:12 4:13 4:15
```

```
B3/8
     -( )-   3:10 4:16
C5:0
     -CTU-   2:10
     -RES-   3:12 4:18
C5:0.ACC
     -EQU-   2:11 2:11 2:12 2:12
C5:0.DN
     -]/[-   2:10
F8:12
     -CPT-   2:1 2:2 2:4 2:5 2:6 2:7
     -EQU-   3:2 3:7 4:4
     -GEQ-   2:11 2:13 4:17
     -GRT-   3:2 4:4 4:14
     -LEQ-   3:3 3:12 4:5 4:14 4:18
     -NEQ-   3:3 4:5
F18:1
     -GEQ-   2:11 2:13 4:17
     -GRT-   3:2 4:4
     -LEQ-   3:3 3:12 4:5 4:18
Rung 4:19
Turns on PAR 2.3 bit to indicate cycle complete
|    B3                                                                  O:013  |
+-+-] [-------+-------------------------------------------+-----------------( )-+-+
| |     4     |                                           |                  16| |
| |O:013   B3 |                                           |+MOV---------------+| |
| +-] [---]/[-+                                           ++MOVE              ++ |
|     16     3                                             |Source           0| |
|                                                          |                  | |
|                                                          |Destination   N9:0| |
|                                                          |                 0| |
|                                                          +------------------+ |
B3/3
     -] [-   3:1 3:2 3:3 3:4 3:6 3:7 3:10 4:3 4:4 4:5 4:6 4:11
     -]/[-   3:13 4:19
     -( )-   3:1 4:3
B3/4
     -] [-   3:13 4:19
     -]/[-   3:1 3:2 3:5 4:3 4:4 4:7 4:13 4:16
     -( )-   3:12 4:18
N9:0
     -BTW-   4:1
     -COP-   4:12 4:15 4:17
     -MOV-   4:19
O:013/16
     -] [-   4:19
     -( )-   4:19
Rung 4:20
|                                                          +RET---------------+ |
+----------------------------------------------------------+RETURN ()         +-+
|                                                          |Return parameter  | |
|                                                          +------------------+ |

Rung 4:21
|                                                                                |
+--------------------------------[END OF FILE]---------------------------------+
|                                                                                |
NO I/O STATUS REPORT FOR THIS PROCESSOR
PROCESSOR STATUS REPORT CONTAINS THIS INFORMATION
```

```
Data Table Report          PLC-5/30          File TEST2            Data Table File F8:0
  Address       0               1               2               3               4
F8:0          1000.000         5O.OOOOO        500.0000         5.000000        0.000000
F8:5          0.000000         0.000000        0.000000         0.000000        0.000000
F8:10         0.000000         0.000000        1.000000      1.048575e+06       0.000000
F8:15         0.000000         0.000000        0.000000         0.000000
```

```
Address    0       1       2       3       4       5       6       7       8       9
N9:0       \00\00  R    e  m   o   v   e   W        e    i  g    h     t
N9:10      s       p    2  0   6    @   á  \00\00  \00\00   \00\00  \00\00  \00\00  \00\00
N9:20      \00\00  \00\00  \00\00  \00\00  \00\00  \00\00   \00\00  \00\00  \00\00  \00\00
N9:30      \00\00  \00\00  \00\00  \00\00  \00\00  \00\00   \00\00  \00\00  \00\00
N9:40      w       t    1  1   0          w       t    1   0    1  \00\00  \00\00  \00\00
N9:50      \80\80  \00  @  \00\00  \00\00  \00  @  \00\00   \00\00  \00\00  \00\00  \00\00
N9:60      \00\00  \00\00  \00\00  \00\00
```

```
Press a function key or enter a value.
N9:0 = 
Rem Prog    Forces:None       Data:ASCII        Addr:Decimal      5/30 File Test2
Change                          Specify            Next           Prev
 Radix                          Address            File           File
   F1                             F5                F7             F8
```

```
Address    0       1       2       3       4       5       6       7       8       9
N10:0              w       t   1   1   0   ?    Ç  \00\00           w       t   1   0   1
N10:10                                             1       \00\00  \00\00  \00\00  \00\00
N10:20     \00\00  \00\00  \00\00  \00\00  \00\00  \00\00   \00\00  \00\00  \00\00  \00\00
N10:30     \FF\FF  \FF\DF  \FF B   \FF\FF  \00\00  \00\00   \00\00  \00\00  \00\00  \00\00
N10:40     \00\00  \00\00  \00\00  \00\00  \00\00  \00\00   \00\00  \00\00  \00\00  \00\00
N10:50     \00\00  \00\00  \00\00  \00\00  \00\00  \00\00   \00\00  \00\00  \00\00  \00\00
N10:60     \00\00  \00\00  \00\00  \00\00
```

```
Press a function key or enter a value.
N10:0 = 
Rem Prog    Forces:None       Data:ASCII      Addr:Decimal        5/30 File TEST2
Change                          Specify           Next            Prev
 Radix                          Address           File            File
  F1                              F5               F7              F8
```

```
Data Table Report      PLC-5/30          File TEST2              Data Table File N11:0
  Address         0       1       2       3       4       5       6       7       8       9
N11:0          8208      64      47       9       0       0       0       0       0       0
N11:10        -24432      64       0      10       0       0       0       0       0       0
N11:20           250       0       0       0       0       0       0       0       0       0
N11:30          1250       0       0       0       0       0       0       0       0       0
N11:40             0       0       0       0       0       0       0       0       0       0
```

```
Data Table Report      PLC-5/30          File TEST2              Data Table File N12:0
  Address         0       1       2       3       4       5       6       7       8       9
N12:0          8224    8307   28721   12341       0       0       0       0       0       0
N12:10         8224    8307   28721   12342       0       0       0       0       0       0
N12:20         8224    8307   28722   12341       0       0       0       0       0       0
N12:30         8224    8307   28722   12342       0       0       0       0       0       0
N12:40            0       0       0       0       0       0       0       0       0       0
```

```
 Press a function key or enter a value.
N10:0 = 
Rem Prog    Forces:None     Data:ASCII      Addr:Decimal          5/30 File TEST2
Change                         Specify           Next           Prev
 Radix                         Address           File           File
  F1                             F5              F7             F8
```

Data Table Report PLC-5/30 File TEST2 Data Table File N11:0

| Address | 0 | 1 | 2 | 3 | 4 | 5 | 6 | 7 | 8 | 9 |
|---|---|---|---|---|---|---|---|---|---|---|
| N11:0 | 8208 | 64 | 47 | 9 | 0 | 0 | 0 | 0 | 0 | 0 |
| N11:10 | -24432 | 64 | 0 | 10 | 0 | 0 | 0 | 0 | 0 | 0 |
| N11:20 | 250 | 0 | 0 | 0 | 0 | 0 | 0 | 0 | 0 | 0 |
| N11:30 | 1250 | 0 | 0 | 0 | 0 | 0 | 0 | 0 | 0 | 0 |
| N11:40 | 0 | 0 | 0 | 0 | 0 | 0 | 0 | 0 | 0 | 0 |

Data Table Report PLC-5/30 File TEST2 Data Table File N12:0

| Address | 0 | 1 | 2 | 3 | 4 | 5 | 6 | 7 | 8 | 9 |
|---|---|---|---|---|---|---|---|---|---|---|
| N12:0 | 8224 | 8307 | 28721 | 12341 | 0 | 0 | 0 | 0 | 0 | 0 |
| N12:10 | 8224 | 8307 | 28721 | 12342 | 0 | 0 | 0 | 0 | 0 | 0 |
| N12:20 | 8224 | 8307 | 28722 | 12341 | 0 | 0 | 0 | 0 | 0 | 0 |
| N12:30 | 8224 | 8307 | 28722 | 12342 | 0 | 0 | 0 | 0 | 0 | 0 |
| N12:40 | 0 | 0 | 0 | 0 | 0 | 0 | 0 | 0 | 0 | 0 |

# PLC-5 Extended Data Program Example

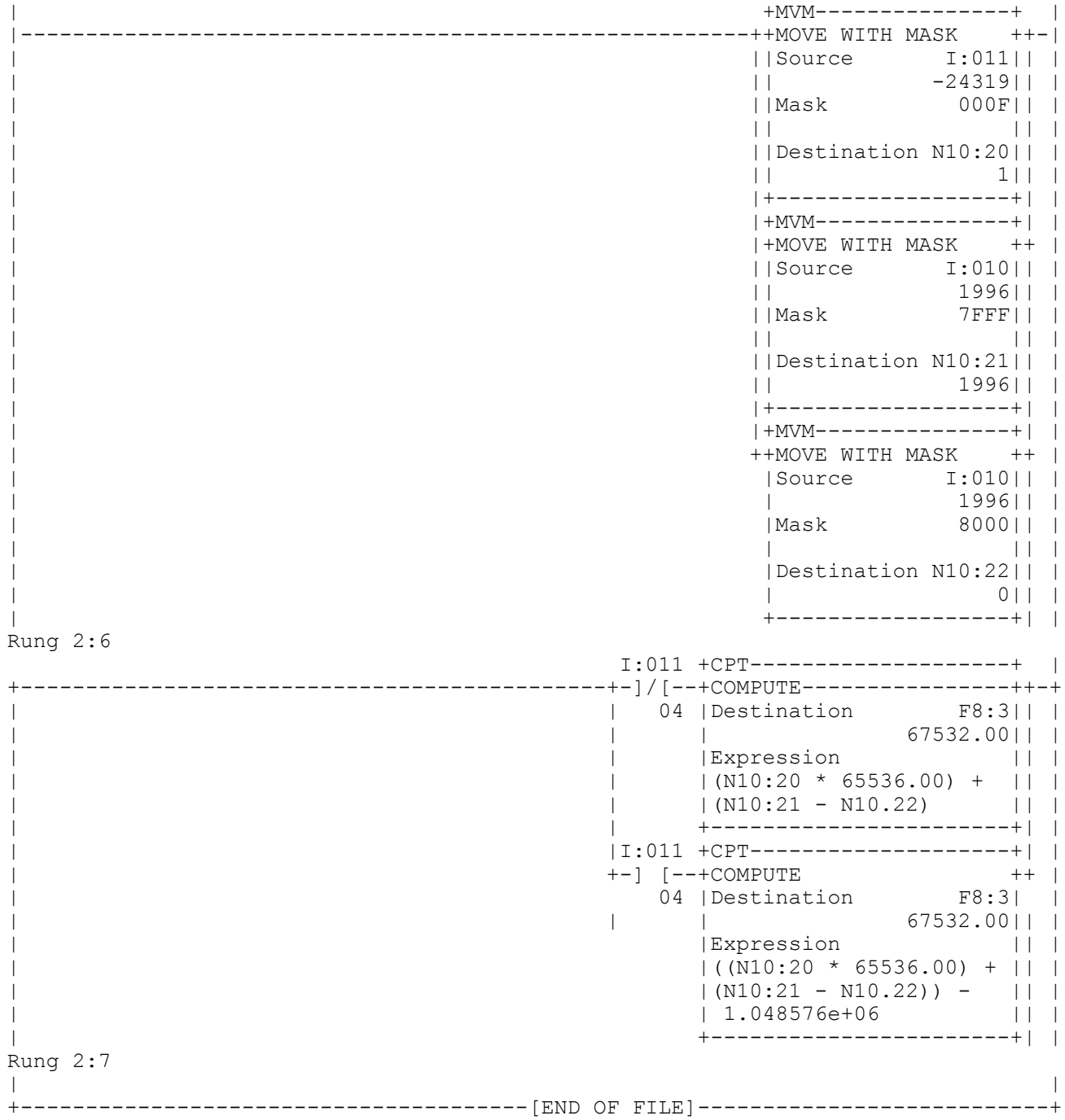

For your notes

# 2 PROFIBUS

## Overview

The PROFIBUS option card enables the JAGXTREME terminal to communicate to a PROFIBUS L2-DP master according to DIN 19 245. It consists of a JAGXTREME terminal backplane-compatible module and software that resides in the terminal, which implements the data exchange.

The PROFIBUS option card interfaces to PLCs such as Texas Instruments 505 series, Siemens S5 series, and Siemens S7 series PLCs.

The Texas Instruments (TI) 505 PLCs interface to the PROFIBUS via an I/O processor called a Field Interface Module (FIM). The FIM bus master recognizes a fixed set of PROFIBUS slave devices, all of which are viewed by it as some sort of remote I/O rack. On power up, the FIM queries each PROFIBUS slave node to determine which of the recognized types a device might be and configures itself accordingly. The PROFIBUS option appears to the FIM to be a small ET200U I/O rack.

The Siemens S5-115 series PLC also interfaces to the PROFIBUS using an I/O processor, an IM-308. This device must be locally programmed with the terminal interface type files. Newer Siemens S7 PLCs have the PROFIBUS option on their main controller card.

### Communications

PROFIBUS is based on a variety of existing national and international standards. The protocol architecture is based on the Open Systems Interconnection (OSI) reference model in accordance with the international standard ISO 7498.

The JAGXTREME terminal supports the PROFIBUS-DP which is designed for high speed data transfer at the sensor actuator level. (DP means Distributed Peripherals.) At this level, controllers such as programmable logic controllers (PLCs) exchange data via a fast serial link with their distributed peripherals. The data exchange with these distributed devices is mainly cyclic. The central controller (master) reads the input information from the slaves and sends the output information back to the slaves. It is important that the bus cycle time is shorter than the program cycle time of the controller, which is approximately 10 ms in most applications. The following is a summary of the technical features of the PROFIBUS-DP communications protocol:

**Transmission Technique**: PROFIBUS DIN 19 245 Part 1

-EIA RS 485 twisted pair cable or fiber optic

-9.6 kbit/s up to 12 Mbit/s, max distance 200 m at 1.5 Mbit/s extendible with repeaters

-12 megabaud maximum rate

**Medium Access**: Hybrid medium access protocol according to DIN 19 245 Part 1

- Mono-Master or Multi-Master systems supported

- Master and Slave Devices, max 126 stations possible

**Communications**: Peer-to-Peer (user data transfer) or Multicast (synchronization)

- Cyclic Master-Slave user data transfer and acyclic Master-Master data transfer.

**Operation Modes:**

- Operate: Cyclic transfer of input and output data
- Clear: Inputs are read and outputs are cleared
- Stop: Only master-master functions are possible

**Synchronization**: enables synchronization of the inputs and/or outputs of all DP-Slaves

- Sync-Mode: Outputs are synchronized
- Freeze-Mode: Inputs are synchronized

**Functionality:**

- Cyclic user data transfer between DP-Master(s) and DP-Slave(s)
- Activation or deactivation of individual DP-Slaves
- Checking of the configuration of the DP-Slaves
- Powerful diagnosis mechanisms, 3 hierarchical levels of the diagnosis
- Synchronization of inputs and/or outputs
- Address assignment for the DP-Slaves over the bus
- Configuration of the DP-Master (DPM1) over the bus
- Max. 246 byte input and output data per DP-Slave, typical 32 byte

**Security and Protection Mechanisms:**

- All messages are transmitted with Hamming Distance HD=4
- Watch-Dog Timer at the DP-Slaves
- Access protection for the inputs/outputs at the DP-Slaves
- Data transfer monitoring with configurable timer interval at the DP-Master (DPM1)

**Device-Types:**

- DP-Master Class 2 (DPM2) e.g. programming/configuration device
- DP-Master Class 1 (DPM1) e.g. central controller like PLC, CNC, or RC
- DP-Slave e.g. Input/Output device with binary or analogue inputs/outputs, drives.

**Cabling and Installation:**

- Coupling or uncoupling of stations without affecting other stations
- Proven and easy to handle two conductor transmission technique

## Node/Rack Address

Each PROFIBUS option card represents one physical node but may contain data for multiple scales. The node address is chosen by the system designer, then programmed into the terminal and PLC. The terminal's node address is programmed through the Configure Options PROFIBUS program block in the setup menu. The node address and amount of input and output words used to communicate between the terminal and the PLC are programmed into the PLC by using its PROFIBUS network configuration software and the terminal's PROFIBUS type files.

The type file used is dependent on the data format and number of scales selected in the terminal. The terminal setup capabilities allow selection of the logical rack (node) address, data format, and number of scales using the node. The terminal will determine the number of input and output words needed for the number of configured scales and chosen data format. The PLC must be configured for the same amount of space.

## Data Formats

The terminal's PROFIBUS option card has two types of data exchanges: discrete data and shared data. Each scale selected to pass data through the terminal's PROFIBUS option has its own assigned input and output words for continuous information to and from the PLC. Shared data access is only available when four scales have been configured. This data is used to pass information that cannot be sent in the discrete data because of size or process speed limitations. It uses additional input and output word space.

## Remote Scale Sharing

Using Ethernet makes it possible for JAGXTREME terminals to communicate with each other and to share resources. A JAGXTREME terminal with a PROFIBUS option card can collect information from up to four networked and local scales when using any of its data formats. The following charts show possible configurations with and without resource sharing.

## With Resource Sharing

### Possible Configurations for JAGXTREME to Siemens PLC Systems

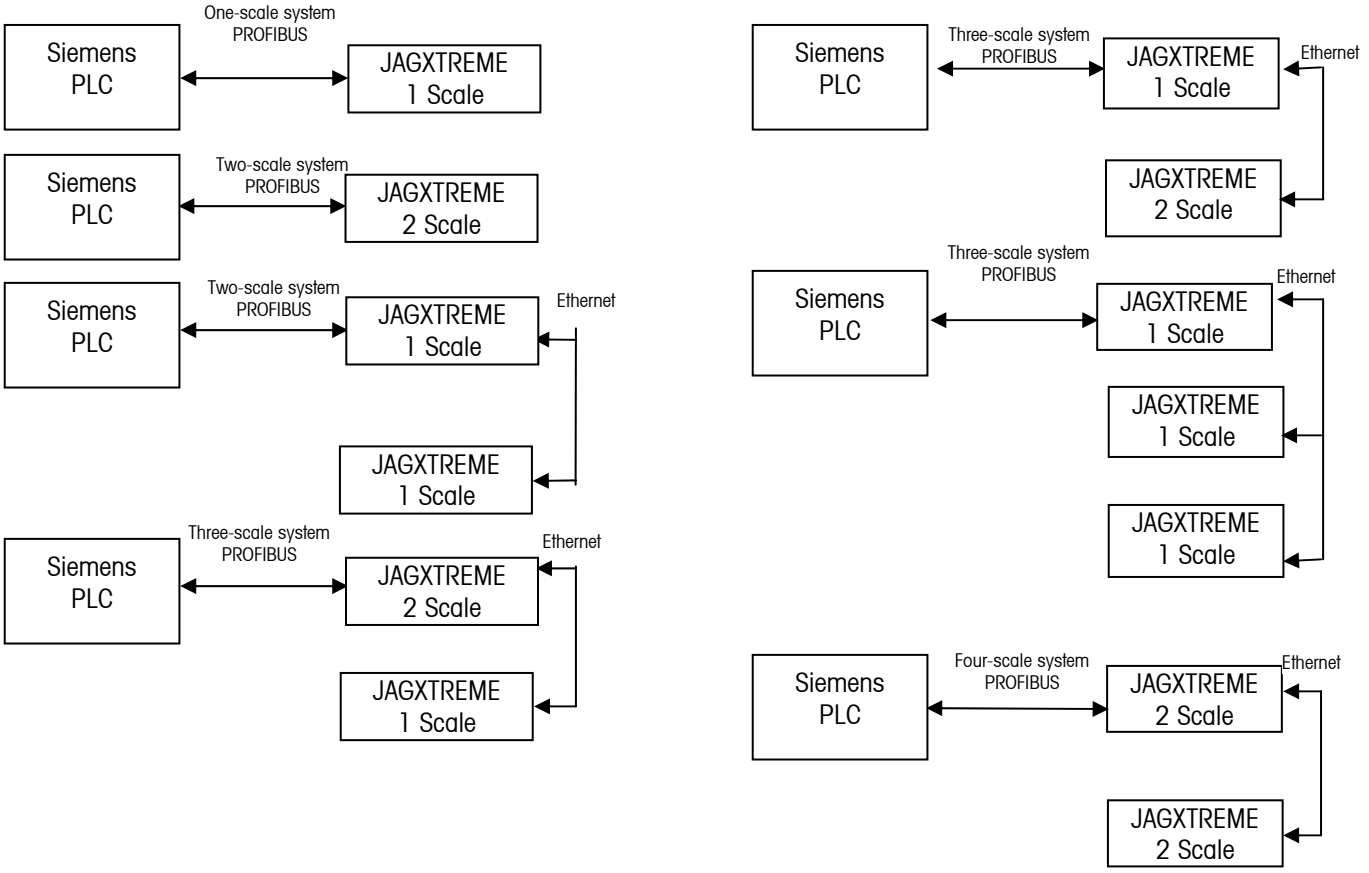


### Possible Configurations for JAXTREME Terminal to Siemens PLC Systems

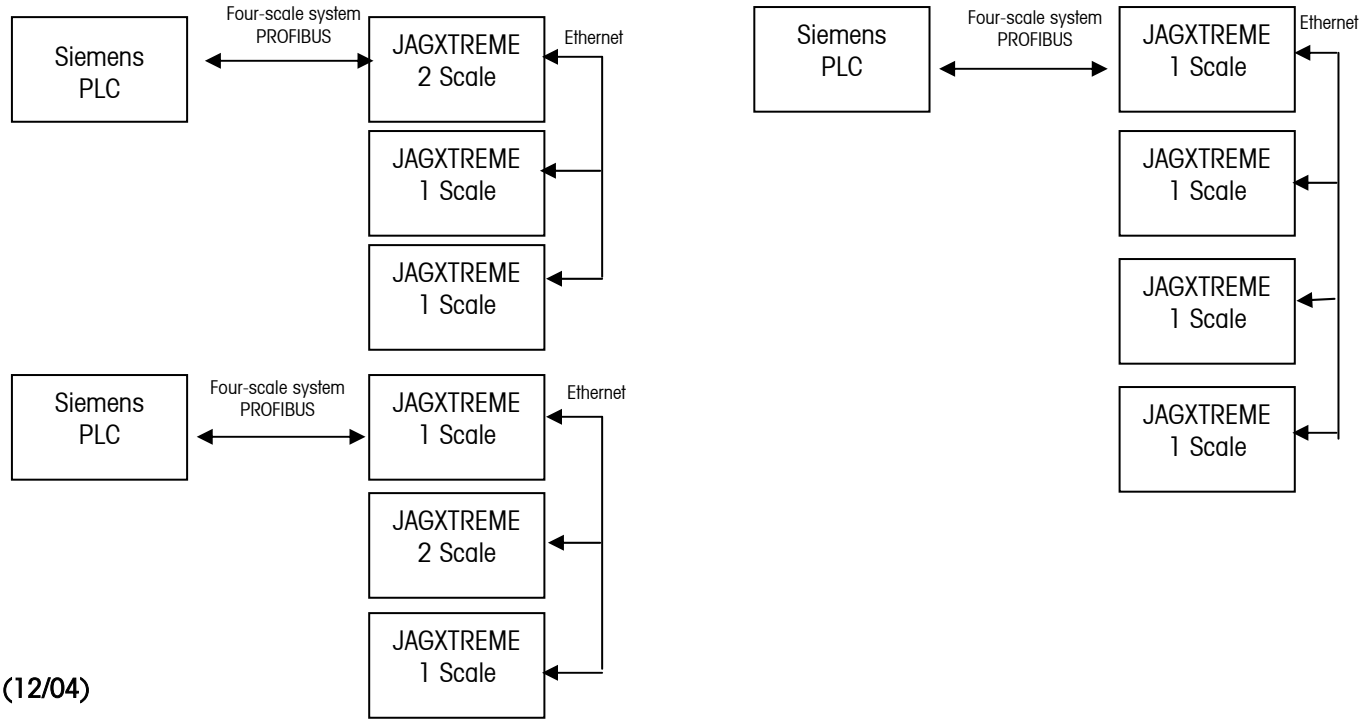

## Possible Configurations for JAGXTREME Terminal to Siemens PLC Systems

### Without Resource Sharing

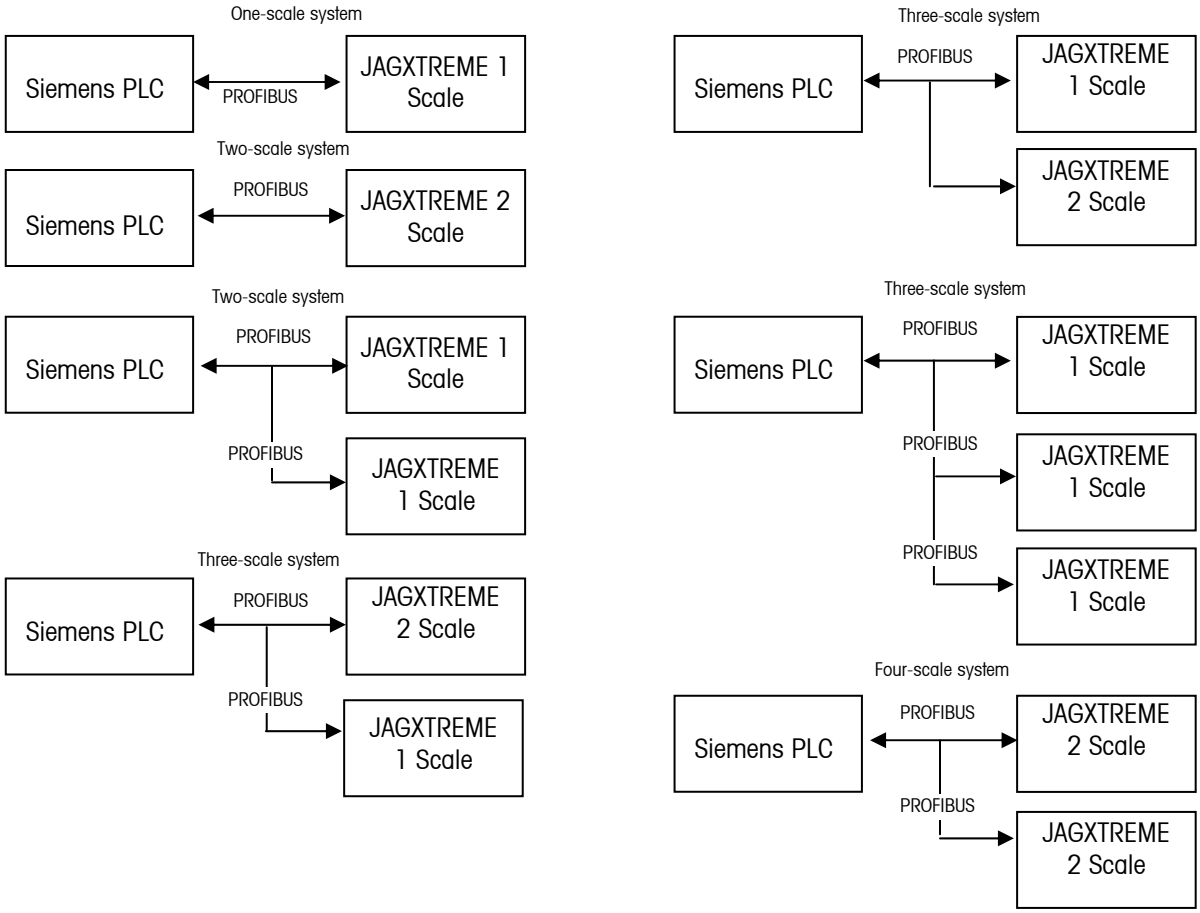


## Possible Configurations for JAGXTREME Terminal to Siemens PLC Systems

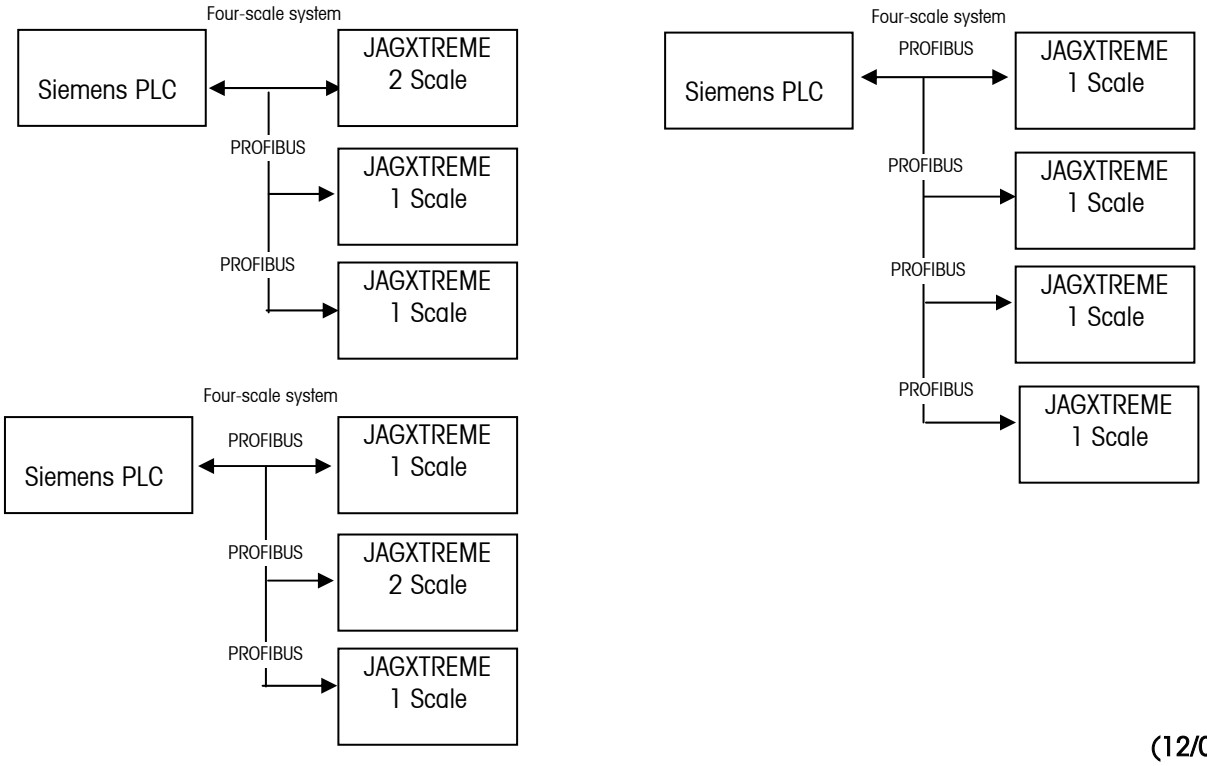

# Data Definition

The PROFIBUS option card uses two types of data for communicating with the PLC: discrete data and shared data. Separate discrete data for each scale is always available and the data transfer is accomplished via the PLC's PROFIBUS network communication messaging. Shared data is only available if data for four scales are enabled through the terminal setup menu. If the shared data is used, it is provided **IN ADDITION TO** the discrete data for each scale.

## Data Integrity

The terminal has specific bits to allow the PLC to confirm that the data was received without interrupt, and the scale is not in an error condition. It is important to monitor these bits. Any PLC code should use them to confirm the integrity of the data received for the scale. Refer to the detailed data charts for specific information regarding the Data OK, update in progress, and data integrity bits and their usage.

## Discrete Data

There are four formats of discrete data available with the PROFIBUS option card: integer (wgt), division (div), extended integer (ext), and floating point (flt). Only one data format may be selected and used by scales sharing the same PROFIBUS option card.

The integer and division formats allow bi-directional communication of discrete bit encoded information or 16-bit binary word (signed integer) numerical values. The extended integer format allows bi-directional communication of discrete bit encoded information, 21-bit binary word (signed extended integer) numerical read values or 16-bit binary word (signed integer) numerical write values.

The floating point format allows bi-directional communication of discrete bit encoded information or numeric data encoded in IEEE 754, single precision floating point format.

The discrete data format affects the input/output word space required per scale and the amount of input/output words used by the PROFIBUS option card. Integer, division, and extended integer formats require two 16-bit words of input and two 16-bit words of output data per scale. One scale uses two 16-bit words of input and two 16-bit words of output; two scales use four16-bit words of input and four 16-bit words of output; three scales use six 16-bit words of input and six 16-bit words of output; and four scales use eight 16-bit words of input and eight 16-bit words of output.

The floating point format requires more space per scale because floating point data uses two 16-bit words of data to represent the numeric data alone. The floating point format requires four 16-bit words of input and four 16-bit words of output data per scale. The smallest amount that the terminal can configure for floating point is eight words of input / eight words of output. This means that when a single scale is configured, there are two sets of input/output data for the scale. Four scales using the floating point format would use 16 words of input and 16 words of output data. Shared data would require additional space.

Selection of the appropriate format depends on different issues. The range or capacity of the scale used in the application should be considered. The integer format can represent a numerical value of up to 32,767; the division format can represent a numerical value of up to 32,767 divisions (or increments); the extended integer can represent a numerical value of over 1,000,000; and, the floating point format can represent a numerical value encoded in IEEE 754, single precision floating point format.

Floating point is the only format that includes decimal point information as a part of its data. All other formats ignore decimal points in their data. Accommodation of decimal point location must take place in the PLC logic, when it is needed with these formats.

For example:

250 x .01 scale

| | | | | |
|---|---|---|---|---|
| Scale reads: | 0 | 2.00 | 51.67 | 250.00 |
| Format sent: | | | | |
| Int | 0 | 200 | 5167 | 25000 |
| Div | 0 | 200 | 5167 | 25000 |
| Ext | 0 | 200 | 5167 | 25000 |
| FLT | 0 | 2.00 | 51.67 | 250.00 |

Any of the formats could be used in this case

50,000 x 10 scale

| | | | | |
|---|---|---|---|---|
| Scale reads: | 0 | 200 | 5160 | 50000 |
| Format sent: | | | | |
| Int | 0 | 200 | 5160 | -(xxxxx) |
| Div | 0 | 20 | 516 | 5000 |
| Ext | 0 | 200 | 5160 | 50000 |
| FLT | 0 | 200 | 5160 | 50000 |

The integer format could not be used because it would send a negative value once the weight exceeded 32,760.

150 x .001 scale

| | | | | |
|---|---|---|---|---|
| Scale reads: | 0 | 2.100 | 51.607 | 150.000 |
| Format sent: | | | | |
| Int | 0 | 2100 | -(xxxxx) | -(xxxxx) |
| Div | 0 | 2100 | -(xxxxx) | -(xxxxx) |
| Ext | 0 | 2100 | 51607 | 150000 |
| FLT | 0 | 2.100 | 51.607 | 150.000 |

The integer and division formats could not be used because they would send a negative value once the weight exceeded 32.767. There is another special requirement for the extended integer format. Since the PLCs do not have any mechanism to interpret 21-bit signed integers, a few rungs of ladder logic are need to convert the bit data into a floating point value. Because the floating point format has more space for its data, it has additional information that can be sent or received, especially if the shared data access is included. Please see each formats detailed description of the data available to determine which is most suitable.

## Discrete Data I/O Space Usage Comparison

The following tables show a comparison of the integer, division, extended integer, floating point, and shared data formats' input and output data usage.

The table below shows a comparison between the integer data formats and the floating point format of the input data:

S5 Input Data (from JAGXTREME terminal to PLC with node configured to address inputs 0- XX)

| Address Word # | Integer, Division, or Extended Integer | Floating Point |
|---|---|---|
| IW:0 or WX:0 | 1st Scale (weight) | 1st Scale command response |
| IW:2 or WX:2 | 1st Scale (status) | 1st Scale floating point |
| IW:4 or WX:4 | 2nd Scale (weight) | Value |
| IW:6 or WX:6 | 2nd Scale (status) | 1st Scale status |
| IW:8 or WX:8 | 3rd Scale (weight) | 2nd Scale command response* |
| IW:10 or WX:10 | 3rd Scale (status) | 2nd Scale floating point* |
| IW:12 or WX:12 | 4th Scale (weight) | Value |
| IW:14 or WX:14 | 4th Scale (status) | 2nd Scale status* |
| IW:16 or WX:16 | Shared Data Access Status | 3rd Scale command response |
| IW:18 or WX:18 | Shared Data Read Field Value** | 3rd Scale floating point |
| IW:20 or WX:20 | Shared Data Read Field Value** | Value |
| IW:22 or WX:22 | Shared Data Read Field Value** | 3rd Scale status |
| IW:24 or WX:24 | Shared Data Read Field Value** | 4th Scale command response |
| IW:26 or WX:26 | Shared Data Read Field Value** | 4th Scale floating point |
| IW:28 or WX:28 | Shared Data Read Field Value** | Value |
| IW:30 or WX:30 | Shared Data Read Field Value** | 4th Scale status |
| IW:32 or WX:32 | Shared Data Read Field Value** | Shared Data Access Status |
| IW:34 or WX:34 | Shared Data Read Field Value** | Shared Data Read Field Value** |
| IW:36 or WX:36 | Shared Data Read Field Value** | Shared Data Read Field Value** |
| IW:38 or WX:38 | N/A | Shared Data Read Field Value** |
| IW:40 or WX:40 | N/A | Shared Data Read Field Value** |
| ~ | N/A | ~ |
| IW:52 or WX:52 | N/A | Shared Data Read Field Value** |

*Can be a second set for first scale if second scale is not used

** The length of shared data value is dependent on the type of shared data field requested.

In no case does it exceed 10 words (20 bytes).

S7

Input Data (from JAGXTREME terminal to PLC with node configured to address inputs 0- XX)

| Address Word # | Integer, Division, or Extended Integer | Floating Point |
|---|---|---|
| PIW:256 | 1st Scale (weight) | 1st Scale command response |
| PIW:258 | 1st Scale (status) | 1st Scale floating point |
| PIW:260 | 2nd Scale (weight) | Value |
| PIW:262 | 2nd Scale (status) | 1st Scale status |
| PIW:264 | 3rd Scale (weight) | 2nd Scale command response* |
| PIW:266 | 3rd Scale (status) | 2nd Scale floating point* |
| PIW:268 | 4th Scale (weight) | Value |
| PIW:270 | 4th Scale (status) | 2nd Scale status* |
| PIW:274 | Shared Data Access Status | 3rd Scale command response |
| PIW:276 | Shared Data Read Field Value** | 3rd Scale floating point |
| PIW:278 | Shared Data Read Field Value** | Value |
| PIW:280 | Shared Data Read Field Value** | 3rd Scale status |
| PIW:282 | Shared Data Read Field Value** | 4th Scale command response |
| PIW:284 | Shared Data Read Field Value** | 4th Scale floating point |
| PIW:286 | Shared Data Read Field Value** | Value |
| PIW:288 | Shared Data Read Field Value** | 4th Scale status |
| PIW:300 | Shared Data Read Field Value** | Shared Data Access Status |
| PIW:302 | Shared Data Read Field Value** | Shared Data Read Field Value** |
| PIW:304 | Shared Data Read Field Value** | Shared Data Read Field Value** |
| PIW:306 | N/A | Shared Data Read Field Value** |
| PIW:308 | N/A | Shared Data Read Field Value** |
| ~ | N/A | ~ |
| PIW:320 | N/A | Shared Data Read Field Value** |

*Can be a second set for first scale if second scale is not used

** The length of shared data value is dependent on the type of shared data field requested.

In no case does it exceed 10 words (20 bytes).

The table below shows a comparison between the integer data formats and the floating point format of the output data:

S5 Output Data (from PLC to JAGXTREME terminal with node configured to address outputs 0- XX)

| Address word # | Integer, Division, or Extended Integer | Floating Point |
|---|---|---|
| QW:0 or WY:0 | 1st Scale (load value) | Reserved |
| QW:2 or WY:2 | 1st Scale (command) | 1st Scale command |
| QW:4 or WY:4 | 2nd Scale (load value) | 1st Scale Floating point |
| QW:6 or WY:6 | 2nd Scale (command) | load value |
| QW:8 or WY:8 | 3rd Scale (load value) | 2nd Scale command* |
| QW:10 or WY:10 | 3rd Scale (command) | 2nd Scale Floating point |
| QW:12 or WY:12 | 4th Scale (load value) | load value* |
| QW:14 or WY:14 | 4th Scale (command) | 3rd Scale command |
| QW:16 or WY:16 | Shared Data Command | 3rd Scale Floating point |
| QW:18 or WY:18 | Shared Data Field Name – JAGXTREME terminal name | load value |
| QW:20 or WY:20 | Shared Data Field Name – variable name | 4th Scale command |
| QW:22 or WY:22 | Shared Data Field Name – variable name | 4th Scale Floating point |
| QW:24 or WY:24 | Shared Data Field Name – variable name | load value |
| QW:26 or WY:26 | Shared Data Write Value** | Shared Data Command |
| QW:28 or WY:28 | Shared Data Write Value** | Shared Data Field Name – JAGXTREME terminal name |
| QW:30 or WY:30 | Shared Data Write Value** | Shared Data Field Name – variable name |
| QW:32 or WY:32 | Shared Data Write Value** | Shared Data Field Name – variable name |
| QW:34 or WY:34 | Shared Data Write Value** | Shared Data Field Name – variable name |
| QW:36 or WY:36 | Shared Data Write Value** | Shared Data Write Value** |
| QW:38 or WY:38 | Shared Data Write Value** | Shared Data Write Value** |
| QW:40 or WY:40 | Shared Data Write Value** | Shared Data Write Value** |
| QW:42 or WY:42 | Shared Data Write Value** | Shared Data Write Value** |
| QW:44 or WY:44 | Shared Data Write Value** | Shared Data Write Value** |
| | N/A | Shared Data Write Value** |
| ~ | N/A | ~ |
| QW:54 or WY:54 | N/A | Shared Data Write Value** |

*Can be a second set for first scale if second scale is not used on the type of shared data field requested. In no case does it exceed 10 words (20 bytes).

S7 Output Data (from PLC to JAGXTREME terminal with node configured to address outputs 0- XX)

| Address word # | Integer, Division, or Extended Integer | Floating Point |
|---|---|---|
| PQW:256 | 1st Scale (load value) | Reserved |
| PQW:258 | 1st Scale (command) | 1st Scale command |
| PQW:260 | 2nd Scale (load value) | 1st Scale Floating point |
| PQW:262 | 2nd Scale (command) | load value |
| PQW:264 | 3rd Scale (load value) | 2nd Scale command* |
| PQW:266 | 3rd Scale (command) | 2nd Scale Floating point |
| PQW:268 | 4th Scale (load value) | load value* |
| PQW:270 | 4th Scale (command) | 3rd Scale command |
| PQW:272 | Shared Data Command | 3rd Scale Floating point |
| PQW:274 | Shared Data Field Name – JAGXTREME terminal name | load value |
| PQW:276 | Shared Data Field Name – variable name | 4th Scale command |
| PQW:278 | Shared Data Field Name – variable name | 4th Scale Floating point |
| PQW:280 | Shared Data Field Name – variable name | load value |
| PQW:282 | Shared Data Write Value** | Shared Data Command |
| PQW:284 | Shared Data Write Value** | Shared Data Field Name – JAGXTREME terminal name |
| PQW:286 | Shared Data Write Value** | Shared Data Field Name – variable name |
| PQW:288 | Shared Data Write Value** | Shared Data Field Name – variable name |
| PQW:290 | Shared Data Write Value** | Shared Data Field Name – variable name |
| PQW:292 | Shared Data Write Value** | Shared Data Write Value** |
| PQW:294 | Shared Data Write Value** | Shared Data Write Value** |
| PQW:296 | Shared Data Write Value** | Shared Data Write Value** |
| PQW:298 | Shared Data Write Value** | Shared Data Write Value** |
| PQW:300 | Shared Data Write Value** | Shared Data Write Value** |
| PQW:302 | N/A | Shared Data Write Value** |
| PQW:304 | N/A | ~ |
| PQW:306 | N/A | Shared Data Write Value** |

*Can be a second set for first scale if second scale is not used on the type of shared data field requested. In no case does it exceed 10 words (20 bytes).

## Integer, Division, and Extended Integer

When one of these formats are selected, each scale will have two 16-bit words for input data and two 16-bit words for output data. The PLC's input data will contain one 16-bit word for the scale's weight information and one 16-bit word for bit encoded status information. The JAGXTREME terminal will send specific data to the PLC input data based on the data it receives from the PLC's output data. The PLC's output words consist of one 16-bit integer value which may be used to download a tare or setpoint 1 and one 16-bit word for bit encoded command information.

The following charts provide information on the integer (int), division (div), and the extended integer (ext) data formats. Read data refers to the PLC's input data and write data refers to the PLC's output data.

### DISCRETE READ INTEGER (wgt) or DIVISION (div) – JAGXTREME Terminal Output to PLC input

| Bit number | 15 | 14 | 13 | 12 | 11 | 10 | 9 | 8 | 7 | 6 | 5 | 4 | 3 | 2 | 1 | 0 |
|---|---|---|---|---|---|---|---|---|---|---|---|---|---|---|---|---|
| 1st WORD IN[1] | X | X | X | X | X | X | X | X | X | X | X | X | X | X | X | X |
| 2nd WORD IN | Data [2] OK | Update[3] in prog | NET[4] mode | MOT[5] | PAR[6] 1.3 | PAR[6] 1.2 | PAR[6] 1.1 | ESC[7] key | SP8 | SP7 | SP6 | SP5 | SP4 | SP3 | SP2 | SP1 |

1- First WORD IN is a 16-bit, signed integer that may represent the scale's gross, net, tare, rate, setpoint #1, or displayed weight. Three bits, set by the PLC in the output word, designate what data is sent by the JAGXTREME terminal in this word.
2- Bit 15 is set to a 1 when the scale is operating properly (NOT over capacity, under capacity, in power-up, in expanded mode, or in diagnostic mode). The PLC program should continuously monitor this bit and the PLC network comm fault (see PLC documentation) to determine the validity of the discrete and/or shared data.
3- Bit 14 is set to a 1 when the JAGXTREME terminal is in the process of updating its data for the PLC. The PLC should ignore ALL of the data in this case and simply re-scan it.
4- Bit 13 is set to a 1 when the scale is in net mode (a tare has been taken).
5- Bit 12 is set to a 1 when the scale is unstable (or in motion).
6- Bits 9, 10, 11 mirror the state of the first three discrete inputs on the JAGXTREME terminal's controller board (labeled IN1, IN2, & IN3). If the input is ON (input grounded) then the bit is set to a 1.
7- Bit 8 is set to a 1 when the ESC key is pressed on the keypad of the JAGXTREME terminal with the PROFIBUS option card. The bit will be cleared to 0 when the display mode bits (see the output table) change from a 0 to any non-zero value.

### DISCRETE READ EXTENDED INTEGER (ext) – JAGXTREME Terminal Output to PLC input

| Bit number | 15 | 14 | 13 | 12 | 11 | 10 | 9 | 8 | 7 | 6 | 5 | 4 | 3 | 2 | 1 | 0 |
|---|---|---|---|---|---|---|---|---|---|---|---|---|---|---|---|---|
| 1st WORD IN[1] | X | X | X | X | X | X | X | X | X | X | X | X | X | X | X | X |
| 2nd WORD IN | Data [2] OK | Update[3] in prog | NET[4] mode | MOT[5] | PAR[6] 1.3 | PAR[6] 1.2 | PAR[6] 1.1 | ESC[7] key | SP3 | SP2 | SP1 | X[1] sign bit | X[1] wgt bit 20 | X[1] wgt bit 19 | X[1] wgt bit 18 | X[1] wgt bit 17 |

1- The scale's gross, net, tare, rate, setpoint #1, or displayed weight is represented by a 21-bit signed integer found in 1ST WORD IN and the first 5 bits of 2ND WORD IN. Three bits, set by the PLC in the output word, designate what data is sent by the JAGXTREME terminal in these bits. Bit 4 of 2ND WORD IN is the sign bit and bit 15 of 1ST WORD IN becomes part of the weight value.
2- Bit 15 is set to a 1 when the scale is operating properly (NOT over capacity, under capacity, in power-up, in expanded mode, or in diagnostic mode). The PLC program should continuously monitor this bit and the PLC network comm fault (see PLC documentation) to determine the validity of the discrete and/or shared data.
3- Bit 14 is set to a 1 when the JAGXTREME terminal is in the process of updating its data for the PLC. The PLC should ignore ALL of the data in this case and simply re-scan it.
4- Bit 13 is set to a 1 when the scale is in net mode (a tare has been taken).
5- Bit 12 is set to a 1 when the scale is unstable (or in motion).
6- Bits 9, 10, 11 mirror the state of the first three discrete inputs on the JAGXTREME terminal's controller board (labeled IN1, IN2, & IN3). If the input is ON (input grounded) then the bit is set to a 1.
7- Bit 8 is set to a 1 when the ESC key is pressed on the keypad of the JAGXTREME terminal with the PROFIBUS option card. The bit will be cleared to 0 when the display mode bits (see the output table) change from a 0 to any non-zero value.

**DISCRETE WRITE INTEGER (wgt), DIVISION (div), or EXTENDED INTEGER (ext) – PLC output to JAGXTREME terminal input**

| Bit number | 15 | 14 | 13 | 12 | 11 | 10 | 9 | 8 | 7 | 6 | 5 | 4 | 3 | 2 | 1 | 0 |
|---|---|---|---|---|---|---|---|---|---|---|---|---|---|---|---|---|
| 1st WORD OUT1 | X | X | X | X | X | X | X | X | X | X | X | X | X | X | X | X |
| 2nd WORD OUT | Load[2] SP-1 | PAR[3] 2.3 | PAR[3] 2.2 | PAR[3] 2.1 | Dislpy mode[4] | Disply mode[4] | Disply mode[4] | Disable setpts[5] | Zero[6] | Print[7] | Tare[8] | Clear[9] | Load Tare[10] | Selec t 3[11] | Selec t 2[11] | Sele ct 1[11] |

1- 1ST WORD OUT is a 16-bit, signed integer value that may represent the scale's tare or setpoint #1 value to be downloaded. Bit 3 or bit 15 are used with this value to instruct the JAGXTREME terminal to load the value into either the tare or setpoint #1.

2- A transition from 0 to 1 loads the value in 1ST WORD OUT into the setpoint 1 value in the JAGXTREME terminal. It will not "use" this value until bit 8 transitions from 0 to 1.

3- Bit 12, bit 13, and bit 14 can be used to control the state of the first three discrete outputs on the JAGXTREME terminal's controller board. These are labeled OUT1, OUT2, OUT3. Setting the bit to a 1 causes the output to be turned ON.

4- Bit 9, bit 10, and bit 11 determine what data is displayed in the JAGXTREME terminal's lower display area. 0 = normal JAGXTREME terminal display mode, 1 = display content of literal 1, 2 = display content of literal 2, 3 = display content of literal 3, 4 = display content of literal 4, 5 = display content of literal 5, 6 = reserved, 7 = display message from block transfer input data. Pressing ESC also clears the display to the JAGXTREME terminal's normal mode. Display literals may be pre-programmed in the JAGXTREME terminal setup through the Configure Memory program block. Literals may also be sent from the PLC via the shared data variables lit01, lit02, lit03, lit04, and lit05.

5- Set bit 8 to 0 to disable all of the JAGXTREME terminal's setpoint outputs. Set bit 8 to 1 to enable all of the JAGXTREME terminal's setpoint outputs. A transition from 0 to 1 causes the JAGXTREME terminal to accept new setpoint values for use.

6- A transition from 0 to 1 causes a ZERO command.

7- A transition from 0 to 1 causes a PRINT command.

8- A transition from 0 to 1 causes a TARE command.

9- A transition from 0 to 1 causes a CLEAR command.

10- A transition from 0 to 1 loads the value in 1ST WORD OUT into the preset tare register of the JAGXTREME terminal.

11-A binary value in bit 0, bit 1, & bit 2 select the data that will be sent by the JAGXTREME terminal in Discrete Read 1ST WORD IN. 0 = gross weight, 1 = net weight, 2 = displayed weight, 3 = tare weight, 4 = setpoint 1, 5 = rate. Any value greater than 5 = gross weight.

# Floating Point

## Operational Overview

The JAGXTREME terminal uses integer commands from the PLC to select the floating point weight output data. The terminal will recognize a command when it sees a new value in the scale's command word. If the command has an associated floating point value (for example: loading a setpoint value), it must be loaded into the floating point value words before the command is issued. Once the terminal recognizes a command, it will acknowledge it by setting a new value in the command acknowledge bits of the scale's command response word. It will also tell the PLC which floating point value is currently being sent (via the floating point input indicator bits of the command response word). The PLC will wait until it receives the command acknowledgment from the terminal before it sends another command.

The terminal can report two types of values to the PLC: real-time and static. When the PLC requests a real-time value, the terminal will acknowledge the command from the PLC once but will send and update the value at every A/D update. However, if the PLC requests a static value, the terminal will acknowledge the command from the PLC once and UPDATE the value once. The terminal will continue to send this "static" value until it receives a new command from the PLC. Gross weight, net weight, and rate are examples of real-time data. Tare weight, setpoint cutoff, dribble, and tolerance values are examples of static data.

The terminal can also send a rotation of up to nine different real-time values for each scale. The PLC sends commands to the terminal to add a value to the rotation list. Once the rotation is established, the PLC must instruct the terminal to begins its rotation automatically or the PLC may control the pace of rotation by instructing the terminal advance to the next value. If the terminal is asked to automatically alternate its output data, it will switch to the next value in its rotation at the next A/D update. (The A/D update rate depends on the scale type. An analog scale has an update rate of 17 Hz or 58 milliseconds.)

The PLC may control the rotation by sending alternate report next field commands (1 and 2). When the PLC changes to the next command, the terminal switches to the next value in the rotation. The terminal stores the rotation in its shared data so the rotation does not have to be re-initialized after each power cycle. When the PLC does not set up an input rotation, the default input rotation consists of gross weight only.

The following charts provide detailed information on the floating point data format. Read data refers to the PLC's input data and write data refers to the PLC's output data.

**DISCRETE READ FLOATING POINT (flt) – JAGXTREME Output to PLC Input**

| Bit number | 15 | 14 | 13 | 12 | 11 | 10 | 9 | 8 | 7 | 6 | 5 | 4 | 3 | 2 | 1 | 0 |
|---|---|---|---|---|---|---|---|---|---|---|---|---|---|---|---|---|
| 1st WORD IN Command Response | Cmnd Ack 2[1] | Cmnd Ack 1[1] | Data[2] integrity 1 | FP Input Ind 5[3] | FP Input Ind 4[3] | FP Input Ind 3[3] | FP Input Ind 2[3] | FP Input Ind 1[3] | RESERVED | | | | | | | |
| 2nd WORD IN[4] FP value | X | X | X | X | X | X | X | X | X | X | X | X | X | X | X | X |
| 3rd WORD IN[4] FP value | X | X | X | X | X | X | X | X | X | X | X | X | X | X | X | X |
| 4th WORD IN Status | Data[5] OK | Data[2] integrity 2 | NET[6] mode | MOT[7] | PAR[8] 1.3 | PAR[8] 1.2 | PAR[8] 1.1 | ESC[9] key | JagBAS bit2[10] | JagBAS bit1[10] | Scale[1] Selected | SP-1 TOL[12] | SP-2 FF[12] | SP-1 FF[12] | SP-2 FEED[12] | SP-1 FEED[12] |

1- The Command Acknowledge bits are used by the JAGXTREME to inform the PLC that it has received a new, valid command. The JAGXTREME rotates sequentially among values 1, 2, 3, 1, 2, 3, 1, 2, … to acknowledge it has processed a new command.

2- The Data Integrity bit in 1st WORD IN (bit 13) is used in conjunction with the bit in 4th WORD IN (bit 14) to insure that the floating point data is valid. For the data to be valid both bits must have the same polarity. These bits will change to the opposite state every A/D (scale) update. If they do not have the same value, the data is invalid. If they are not changing state, the data is invalid. Any time the data is invalid, the PLC should ignore ALL of the data, and simply re-scan it.

3- The Floating Point Input Indication bits (1st WORD IN, bits 8-12) are used to determine what type of data is being sent in the floating point value (2nd WORD IN and 3rd WORD IN). These bits correspond to a decimal value of 0-31 which represent a particular type of data. See the Floating Point Input Indication Table to determine what type of data.

4- The Bits in 2nd WORD IN and 3rd WORD IN are a single-precision floating point value that may represent the scale's gross, tare, net, rate, setpoint 1, setpoint 2, fine gross, fine tare, fine net, custom JagBASIC, or filter setting data. The PLC command in the respective scale's output word determines what data will be sent.

5- Bit 15 is set to a 1 when the scale is operating properly (NOT over capacity, under capacity, in power-up, in expanded mode, or in diagnostic mode).The PLC program should continuously monitor this bit and the PLC network comm fault (see PLC documentation) to determine the validity of the discrete and/or shared data.

6- Bit 13 is set to a 1 when the scale is in net mode (a tare has been taken).

7- Bit 12 is set to a 1 when the scale is unstable (or in motion).

8- Bits 9, 10, 11 mirror the state of the first three discrete inputs on the JAGXTREME terminal's controller board (labeled IN1, IN2, & IN3). If the input is ON (input grounded) then the bit is set to a 1.

9- Bit 8 is set to a 1 when the ESC key is pressed on the keypad of the terminal with the PROFIBUS option card. The bit will be cleared to 0 when the display mode bits (see the output table) change from a 0 to any non-zero value.

10- The JagBASIC custom bits can be used with a custom JagBASIC application to communicate special status to the PLC. The JagBASIC and PLC code define the meaning of these bits.

11- The Scale Selected bit allows the PLC to determine which scale is currently displayed on the upper weight display (for two scale systems). When the bit is set to 1,the scale associated with this data is selected.

12- These setpoint bits are used to report the status of the setpoint feed, fast feed, and tolerance conditions.

**Floating Point Input Indication Table**

| Dec | Data | Dec | Data | Dec | Data |
|---|---|---|---|---|---|
| 0 | Gross Weight [1] | 8 | JagBASIC custom #2 [1] | 16 | Setpoint 2 dribble |
| 1 | Net Weight [1] | 9 | JagBASIC custom #3 | 17 | Setpoint 1 tolerance |
| 2 | Tare Weight [1] | 10 | JagBASIC custom #4 | 18 | primary units, low increment size |
| 3 | Fine Gross Weight [1] | 11 | Low-pass filter frequency | 19 - 28 | reserved |
| 4 | Fine Net Weight [1] | 12 | Notch filter frequency | 29 | last JAGXTREME error code |
| 5 | Fine Tare Weight [1] | 13 | Setpoint 1 cutoff | 30 | No data response command successful |
| 6 | Rate [1] | 14 | Setpoint 2 cutoff | 31 | No data response command failed |
| 7 | JagBASIC custom #1 [1] | | | | |

1-These are real-time fields that the PLC may request either through an input rotation or a report command. All other fields may only be requested through a report command.

**DISCRETE WRITE FLOATING POINT (flt) – PLC Output to JAGXTREME Input**

| Bit number | 15 | 14 | 13 | 12 | 11 | 10 | 9 | 8 | 7 | 6 | 5 | 4 | 3 | 2 | 1 | 0 |
|---|---|---|---|---|---|---|---|---|---|---|---|---|---|---|---|---|
| 1st WORD OUT | RESERVED | | | | | | | | | | | | | | | |
| 2nd WORD OUT | Scale A command[1] | | | | | | | | | | | | | | | |
| 3rd WORD OUT[2] FP load value | X | X | X | X | X | X | X | X | X | X | X | X | X | X | X | X |
| 4th WORD OUT[2] FP load value | X | X | X | X | X | X | X | X | X | X | X | X | X | X | X | X |
| 5th WORD OUT[3] | Scale B command[1] | | | | | | | | | | | | | | | |
| 6th WORD OUT[2,3] FP load value | X | X | X | X | X | X | X | X | X | X | X | X | X | X | X | X |
| 7th WORD OUT[2,3] FP load value | X | X | X | X | X | X | X | X | X | X | X | X | X | X | X | X |

1- The command word (2nd WORD OUT for scale A /& 5th WORD OUT for scale B or the second set of data for scale A) is used to instruct the JAGXTREME what data to send in the discrete read data, to load the floating point data in the write command, and to control the JAGXTREME terminal's discrete outputs or lower display. See the PLC Output Command Table for a list of the available commands and their respective decimal or hex value. Not all commands will require a value in the floating point load value words.
2- The bits in 3rd WORD OUT and 4th WORD OUT (or 6th WORD OUT and 7th WORD OUT) are a single-precision floating point value. This value is used with the command in the 2nd WORD OUT (or 5th WORD OUT) to instruct the JAGXTREME to download the floating point value into the field specified in the command.
3- These words are used if scale B is present or a second data set for scale A is wanted.

**PLC Output Command Table (Floating point only)**

| Dec | (Hex) | Command |
|---|---|---|
| 0 | 00 | Report next rotation field @ next A/D update [1] |
| 1 | 01 | Report next rotation field [1,2] |
| 2 | 02 | Report next rotation field [1,2] |
| 3 | 03 | Reset rotation |
| 10 | 0a | Report gross weight [1,3] |
| 11 | 0b | Report net weight [1,3] |
| 12 | 0c | Report tare weight [1,3] |
| 13 | 0d | Report fine gross weight [1,3] |
| 14 | 0e | Report fine net weight [1,3] |
| 15 | 0f | Report tare weight [1,3] |
| 16 | 10 | Report rate [1,3] |
| 17 | 11 | Report JagBASIC value #1 [1,3,7] |
| 18 | 12 | Report JagBASIC value #2 [1,3,8] |
| 19 | 13 | Report low-pass filter frequency [3] |
| 20 | 14 | Report notch filter frequency [3] |
| 21 | 15 | Report setpoint 1 cutoff [3,4] value |
| 22 | 16 | Report setpoint 2 cutoff [3,4] value |
| 23 | 17 | Report setpoint 1 dribble [3,4] value |
| 24 | 18 | Report setpoint 2 dribble [3,4] value |
| 25 | 19 | Report setpoint tolerance [3,4] value |
| 27 | 1b | Report JagBASIC value #3 [3,9] |
| 28 | 1c | Report JagBASIC value #4 [3, 10] |
| 29 | 1d | Report error [3] |
| 30 | 1e | Report primary units [3] |
| 40 | 28 | Add gross weight to rotation |
| 41 | 29 | Add net weight to rotation |
| 42 | 2a | Add tare weight to rotation |
| 43 | 2b | Add fine gross weight to rotation |
| 44 | 2c | Add fine net weight to rotation |
| 45 | 2d | Add fine tare weight to rotation |
| 46 | 2e | Add rate to rotation |
| 47 | 2f | Add JagBASIC value #1 to rotation |
| 48 | 30 | Add JagBASIC value #2 to rotation |
| 60 | 3c | Load programmable tare value [5] |
| 61 | 3d | Pushbutton tare command |
| 62 | 3e | Clear command |
| 63 | 3f | Print command |
| 64 | 40 | Zero command |
| 65 | 41 | Select scale A |
| 66 | 42 | Select scale B |
| 67 | 43 | Select other scale |
| 68 | 44 | Custom print 1 command |
| 69 | 45 | Custom print 2 command |
| 70 | 46 | Custom print 3 command |
| 71 | 47 | Custom print 4 command |
| 72 | 48 | Custom print 5 command |
| 73 | 49 | Set low-pass filter frequency [5] |
| 74 | 4a | Set notch filter frequency [5] |

| Dec | (Hex) | Command |
|---|---|---|
| 75 | 4b | Reset ESC key |
| 78 | 4e | Disable error display |
| 79 | 4f | Enable error display |
| 80 | 50 | Set normal display mode |
| 81 | 51 | Display Literal 1 |
| 82 | 52 | Display Literal 2 |
| 83 | 53 | Display Literal 3 |
| 84 | 54 | Display Literal 4 |
| 85 | 55 | Display Literal 5 |
| 87 | 57 | Display shared data message |
| 88 | 58 | Disable weight display |
| 89 | 59 | Enable weight display |
| 90 | 5a | Set discrete OUT1 on |
| 91 | 5b | Set discrete OUT2 on |
| 92 | 5c | Set discrete OUT3 on |
| 93 | 5d | Set discrete OUT4 on |
| 100 | 64 | Set discrete OUT1 off |
| 101 | 65 | Set discrete OUT2 off |
| 102 | 66 | Set discrete OUT3 off |
| 103 | 67 | Set discrete OUT4 off |
| 110 | 6e | Set setpoint 1 cutoff value [4,5] |
| 111 | 6f | Set setpoint 1 dribble value [4,5] |
| 112 | 70 | Set setpoint 1 tolerance value [4,5] |
| 114 | 72 | Enable setpoint 1 [4] |
| 115 | 75 | Disable setpoint 1 [4] |
| 116 | 76 | Setpoint 1 use gross weight [4] |
| 117 | 77 | Setpoint 1 use net weight [4] |
| 118 | 78 | Setpoint 1 use rate [4] |
| 119 | 77 | Setpoint 1 fill [4] |
| 120 | 78 | Setpoint 1 discharge [4] |
| 121 | 79 | Enable setpoint 1 latching [4] |
| 122 | 7a | Disable setpoint 1 latching [4] |
| 123 | 7b | Reset setpoint 1 latch [4] |
| 130 | 82 | Set setpoint 2 cutoff value [4,5] |
| 131 | 83 | Set setpoint 2 dribble value [4,5] |
| 134 | 86 | Enable setpoint 2 [4] |
| 135 | 87 | Disable setpoint 2 [4] |
| 136 | 88 | Setpoint 2 use gross weight [4] |
| 137 | 89 | Setpoint 2 use net weight [4] |
| 138 | 8a | Setpoint 2 use rate [4] |
| 139 | 8b | Setpoint 2 fill [4] |
| 140 | 8c | Setpoint 2 discharge [4] |
| 141 | 8d | Enable setpoint 2 latching [4] |
| 142 | 8e | Disable setpoint 2 latching [4] |
| 143 | 8f | Reset setpoint 2 latch [4] |
| 150 | 96 | Set JagBASIC Output 1 value [6, 11] |
| 151 | 97 | Set JagBASIC Output 2 value [6, 12] |
| 152 | 98 | Set JagBASIC Output 3 value [6, 13] |

| Dec | (Hex) | Command |
|---|---|---|
| 153 | 99 | Set JagBASIC Output 4 value [6, 14] |
| 160 | a0 | Apply scale setup |
| 161 | a1 | Write scale calibration to EEPROM |
| 162 | a2 | Disable JAGXTREME tare |
| 163 | a3 | Enable JAGXTREME tare |

NOTES:
1 – A command that requests real-time fields from the JAGXTREME. The JAGXTREME updates this input data to the PLC at the A/D update rate of the scale
2 – A command used by the PLC to select the next field from the input rotation. The PLC must alternate between these two commands to tell the JAGXTREME when to switch to the next field of the input rotation.
3 – A command requiring the JAGXTREME to report a specific value in the PLC input message. As long as one of these commands is sent in the Scale Command, the JAGXTREME will respond with the requested data and not data from an input rotation.
4 – The setpoint numbers are relative to each particular scale in the JAGXTREME. Scale A uses setpoints 1 & 2. Scale B uses setpoints 3 & 4.
5 – A command that requires a floating point value output from the PLC to the JAGXTREME. The JAGXTREME reflects back this value in the floating point data of the input message to the PLC.
6 – A command used between the PLC and a JagBASIC application. This data has a four-byte length and is defined by the application.
7 – JAGBASIC to PLC Floating Point Variable BAS 18
8 – JAGBASIC to String Variable BAS 19

9 – JAGBASIC to PLC Floating Point Variable BAS 20
10 – JAGBASIC to String Variable BAS 21
11 – PLC to JAGBASIC Floating Point Variable BAS 14
12 – PLC to JAGBASIC String Variable BAS 15
13 – PLC to JAGBASIC to Floating Point Variable BAS 16
14 – PLC to JAGBASIC String Variable BAS 17

## Floating Point Command Examples

JAGXTREME terminal configured as node 3, using input & output words 10-17

**Data requirement: only net weight sent (continuously) for scale 1**

| Step # | Scale command (from PLC) | Scale Floating Point Value | Command response from JAGXTREME | Floating Point Value |
|---|---|---|---|---|
| 1 (PLC sends command to JAGXTREME to report net weight) | 11 (dec) loaded into command word QW OR WY:11 | none required | | |
| 2 (JAGXTREME sees new command) | | | Command ack. =1 F.P. ind. = 1 (net) | Net weight in floating point |
| As long as the PLC leaves the 11 (dec) in the command word the JAGXTREME will update the net value every A/D cycle. | | | | |

**Data requirement: load setpoint 1 cutoff value = 21.75 for scale 1**

| Step # | Scale command (from PLC) | Scale Floating Point Value | Command response from JAGXTREME | Floating Point Value |
|---|---|---|---|---|
| 1 (PLC loads floating point value first) | | floating point value = 21.75 | | |
| 2 (PLC sends command to set setpoint 1 cutoff value) | 110 (dec) loaded into command word QW OR WY:11 | floating point value = 21.75 | | |
| 3 (JAGXTREME sees new command, loads the value into the setpoint and ends a return message to indicate the new setpoint value) | | | Command ack. = 1 F.P. ind = 13 | Floating point value = 21.75 |
| 4 (PLC instructs JAGXTREME to start "using" new setpoint value) | 114 (dec) loaded into command word QW OR WY:11 | | | |
| 5 (JAGXTREME sees new command) | | | Command ack. = 2 F.P. ind = 30 | (null value) |
| The PLC should always wait to receive a command acknowledgment before sending the next command to the JAGXTREME. After the PLC finishes loading its setpoint value, it could then resume monitoring the weight information it requires by sending a command to report some type of weight or set up a rotation of reported data. | | | | |

**Data requirement: rotation of gross weight and rate updated on A/D**

| Step # | Scale command (from PLC) | Scale Floating Point Value | Command response from JAGXTREME | Floating Point Value |
|---|---|---|---|---|
| 1 (PLC clears out previous rotation with reset) | 3 (dec) loaded into command word QW OR WY:11 | | | |
| 2 (JAGXTREME sees new command) | | | Command ack.= 1 F.P. ind = 30 | |
| 3 (PLC adds gross weight to rotation) | 40 (dec) loaded into command word QW OR WY:11 | (null value) | | |
| 4 (JAGXTREME sees new command) | | | Command ack. = 2 F.P. ind = 30 | |
| 5 (PLC adds rate to the rotation) | 46 (dec) loaded into command word QW OR WY:11 | | | |
| 6 (JAGXTREME sees new command) | | | Command ack. = 3 F.P. ind = 30 | (null value) |
| At this point, the rotation has been set up. Now the PLC needs to command the JAGXTREME to begin the rotation. | | | | |
| 7 (PLC sends command to begin rotation at A/D) | 0 (dec) loaded into command word QW OR WY:11 | | | |
| 8 (JAGXTREME sends gross weight at A/D update ~ 58 msec) | | | Command ack. = 0 F.P. ind = 0 | Floating point value = gross wt. |
| 9 (PLC leaves 0 in command word & JAGXTREME sends the rate value at next A/D) | 0 (dec) loaded into command word QW OR WY:11 | | Command ack. = 0 F.P. ind = 6 | Floating point value = rate |
| 10 (PLC leaves 0 in command word & JAGXTREME sends the gross value at next A/D) | 0 (dec) loaded into command word QW OR WY:11 | | Command ack. = 0 F.P. ind = 0 | Floating point value = gross wt. |
| 11 (PLC leaves 0 in its command word & the JAGXTREME sends the rate value at the next A/D) | 0 (dec) loaded into command word QW OR WY:11 | | Command ack. = 0 F.P. ind = 6 | Floating point value = rate |
| This rotation continues until the PLC sends a different command. At approximately every 58 msec the JAGXTREME updates its data with the next field in its rotation. The PLC must check the floating point indication bits to determine which data is in the floating point value. | | | | |

**Data requirement: rotation of net weight and rate updated on PLC command**

| step # | Scale command (from PLC) | Scale Floating Point Value | Command response from JAGXTREME | Floating Point Value |
|---|---|---|---|---|
| 1 (PLC clears out any previous rotation with reset) | 3 (dec) loaded into command word QW OR WY:11 | | | |
| 2 (JAGXTREME sees new command) | | | Command ack.= 1 F.P. ind = 30 | |
| 3 (PLC adds net weight to rotation) | 41 (dec) loaded into command word QW OR WY:11 | (null value) | | |
| 4 (JAGXTREME sees new command) | | | Command ack. = 2 F.P. ind = 30 | |
| 5 (PLC adds rate to the rotation) | 46 (dec) loaded into command word QW OR WY:11 | | | |
| 6 (JAGXTREME sees new command) | | | Command ack. = 3 F.P. ind = 30 | (null value) |
| At this point, the rotation has been set up. Now the PLC needs send commands to the JAGXTREME to begin the rotation and advance to the next value when required. | | | | |
| 7 (PLC sends the command to report the first field in the rotation.) | 1 (dec) loaded into command word QW OR WY:11 | | | |
| 8 (JAGXTREME acknowledges the command and sends net weight at every A/D update until the PLC gives the command to report the next rotation field.) | | | Command ack. = 1 F.P. ind = 1 | Floating point value = net wt. |
| 9 (PLC sends the command to report the next field.) Note: if the PLC leaves the 1 (dec) in the command, the JAGXTREME does NOT see this as another command to report the next rotation field. | 2 (dec) loaded into command word QW OR WY:11 | | | |
| 10 (JAGXTREME acknowledges the command and sends rate at every A/D update until the PLC gives the command to report the next rotation field.) | | | Command ack. = 2 F.P. ind = 6 | Floating point value = rate |

| | | | | |
|---|---|---|---|---|
| 11<br>(PLC sends the command to report the next field in the rotation.) | 1 (dec) loaded into command word QW OR WY:11 | | | |
| 12<br>(JAGXTREME acknowledges the command and sends net weight at every A/D update until the PLC gives the command to report the next rotation field.) | | | Command ack. = 1<br>F.P. ind = 1 | Floating point value = net wt. |
| 13<br>(PLC sends the command to report the next field.) | 2 (dec) loaded into command word QW OR WY:11 | | | |
| 14<br>(JAGXTREME acknowledges the command and sends rate at every A/D update until the PLC gives the command to report the next rotation field.) | | | Command ack. = 2<br>F.P. ind = 6 | Floating point value = rate |
| At approximately every 58 msec the JAGXTREME updates its data with new data, but it does not advance to the next field in the rotation until the PLC sends it the command to report the next field. The PLC should check the floating point indication bits to determine which data is in the floating point value. | | | | |

# Floating Point Numbers

The Simatic TI505 PLCs support the IEEE Standard floating point numbers. According the Simatic TI505 Programming Reference Manual real numbers are stored in the single-precision 32-bit format, according to ANSI/IEEE Standard 754-1985, in the range 5.42101070 E-20 to 9.22337177 E18.

Siemens S5 PLCs do not support inherently the IEEE-format floating point numbers. S5 PLCs do support floating point numbers in their own unique format. You can implement a software "function block" in the S5 PLC that converts between the S5 floating point numbers and the IEEE Standard floating point numbers. Appendix 2 shows a sample PLC program for converting a IEEE Standard Floating Point Number to an S5-format Floating Point Number.

The Siemens S7 PLCs support the IEEE Standard floating point numbers.

# Shared Data

## Operational Overview

PROFIBUS PLCs can access the terminal's Shared Data. Since the PROFIBUS communications supports up to 244-byte messages at speeds typically in the range of 1.5 to 12 megahertz, there is not a need for two separate modes of communication unlike Allen-Bradley and its block transfer. PROFIBUS PLCs can read JAGXTREME Shared Data variables, write new values to JAGXTREME Shared Data variables, and write operator messages on the terminal's lower display. For PROFIBUS, the PLC output data had additional fields for accessing Shared Data. The PLC must specify the Shared Data command and variable name in the PLC output message. If the command is a

write command, then the PLC output message must also contain the write field value. The maximum length of the value is 20 bytes. When the Shared Data command is a read command, the PLC input message will have a read field containing the data from the Shared Data variable specified in the output message. The maximum length of the data reported in the read field is 20 bytes. The Shared Data variables are self-typing. The JAGXTREME terminal determines the type of any valid data field in the message from the variable's name and definition in Shared Data. The terminal will not allow string data to be written in a floating point variable or visa versa.

## Shared Data Input

The input information for the shared data consists of two sections: the shared data status and the shared data read field value (if requested by the shared data output command). The shared data status information is a word that contains an integer value. This integer value represents one of the following status values:

0 Null status
1 Command completed successfully
2 Invalid shared data name
3 Invalid shared data command
4 Cannot write because field is write-protected (legal for trade)
5 Cannot access remote JAGXTREME

Please refer to the Shared Data Reference Guide for a complete listing of Shared Data Fields.

The shared data read field value contains the value of the shared data variable specified in the shared data output (from the PLC to the terminal). It is only present when the command from the shared data output requests read shared data. This value is self-typing; for example, it could be a floating point number or a string variable. The length is determined by the variable selected but will not exceed 20 bytes. See the tables following the Shared Data Output for a list of possible variables and their contents.

## Shared Data Output

The output information for the shared data consists of four sections: the shared data command, the shared data name, the shared data variable name, and the shared data write value (if required by the shared data output command). The shared data command information is a word that contains an integer value. This integer value represents one of the following status values:

0 Null command
1 Read shared data
2 Write shared data
3 Write to JAGXTREME lower display

The terminal processes a shared data command "on demand" by the PLC. When a new value is placed in the shared data command word, the terminal will perform the command issued. The terminal does not provide "real time" information to the PLC; it supplies a "snapshot' of the data not an automatic update of new values of the same shared data command. Instead, the PLC must request the information again by setting a new value in the shared data command word.

To do successive reads, for example, the PLC must alternate between a "null" command and a "read" command in the shared data command word. For the most efficient processing, the PLC should set up the terminal name, the variable name, and the write value (if any) while it is setting the "null" command. Once that is completed, the PLC can then set the shared data command to "read" or "write".

Before sending a command to write to the terminal's lower display, the PLC must issue a display mode command in the scale command words (command 57 for floating point data; 2nd word bits 9-11 = on for other data formats) to enable the terminal to accept commands for its display.

The following tables list the field code names for the variables available for shared data read and write.

| Floating Point Data Fields | | | |
|---|---|---|---|
| Field Code | Description | Read/Write | Length |
| wtn10 | Gross Weight | R | 4 |
| wtn11 | Net Weight | R | 4 |
| wtn12 | Auxiliary Gross Weight | R | 4 |
| wtn13 | Auxiliary Net Weight | R | 4 |
| wsn04 | Tare Weight | R | 4 |
| wsn05 | Auxiliary Tare Weight | R | 4 |
| spn05 | Setpoint Coincidence Value | R/W | 4 |

Replace "n" with appropriate scale number. Example: wt110 or wt210.

| String Data Fields | | | |
|---|---|---|---|
| Field Code | Description | Read/ Write | Length |
| wtn01 | Gross Weight | R | 12 |
| wtn02 | Net Weight | R | 12 |
| wtn03 | Weight Units | R | 2 |
| wtn04 | Auxiliary Gross Weight | R | 12 |
| wtn05 | Auxiliary Net Weight | R | 12 |
| wtn06 | Auxiliary Weight Units | R | 2 |
| s_200 | Scale Motion A (0 or 1 binary) | R | 1B[1] |
| s_201 | Center of Zero A (0 or 1 binary) | R | 1B[1] |
| s_202 | Over Capacity A (0 or 1 binary) | R | 1B[1] |
| s_203 | Under Zero A (0 or 1 binary) | R | 1B[1] |
| s_204 | Net Mode A | R | 1B[1] |
| s_207 | Scale A Selected | R | 1B[1] |
| s_208 | Scale Motion B | R | 1B[1] |
| s_209 | Center of Zero B | R | 1B[1] |
| s_20a | Over Capacity B | R | 1B[1] |
| s_20b | Under Zero B | R | 1B[1] |
| s_20c | Net Mode B | R | 1B[1] |
| s_20f | Scale B Selected | R | 1B[1] |
| wsn01 | Scale Mode (Gross or Net) | R | 1 |
| wsn02 | Tare Weight | R | 12 |
| wsn03 | Auxiliary Tare Weight | R | 12 |
| wsn06 | Current Units (1=primary, 2=secondary) | R | 1I[3] |
| wsn07 | Tare Source (1=PB, 2=KB, 3=auto) | R | 1I[3] |

Replace "n" with appropriate scale number. Example: wt101 or wt201.

| String Data Fields | | | |
|---|---|---|---|
| Field Code | Description | Read/ Write | Length |
| csn01 | Auxiliary Display Units (1=lb, 2=kg, 3=g, 4=oz, 5=lb/oz, 6=troy oz, 7=pennyweight, 8=metric tons, 9=tons, 10=custom) | R | 1I[3] |
| csn02 | Custom Units Name | R/W | 6 |
| csn18 | Scale ID | R/W | 8 |
| spn01 | Setpoint Name | R/W | 8 |
| spn02 | Setpoint Assignment (0=none, 1=scale A, 2=scale B) | R | 1I[3] |
| jag07 | Julian Date | R | 8 |
| jag08 | Julian Time | R | 8 |
| jag09 | Consecutive Number | R/W | 2 |
| jag11 | Software ID | R | 12 |
| jag20 | Time | R | 11 |
| jag21 | Weekday | R | 10 |
| lit01[2] | User Literal 1 | R/W | 40 |
| lit20 | User Literal 20 | R/W | 40 |
| Pmt01[2] | User Prompt 1 | R/W | 40 |
| Pmt20 | User Prompt 20 | R/W | 40 |
| var01[2] | User Variable 1 | R/W | 40 |
| var20 | User Variable 20 | R/W | 40 |

1 Fields identified as 1B are returned as a binary 0 or 1 designating false or true.

2 There are 20 each user literals, prompts and variables numbered 01-20.

3 Fields identified as 1I are returned as integer values as described.

Replace "n" with appropriate scale number. Example: cs118 or cs218.

## Controlling Discrete I/O Using a PLC Interface

The JAGXTREME terminal provides the ability to directly control its discrete outputs and read its discrete inputs via the (digital) PLC interface options. System integrators should be aware that the JAGXTREME discrete I/O updates are synchronized with the A/D rate, not with the PLC I/O scan rate. This may cause a noticeable delay in reading inputs or updating outputs as observed from the PLC to real world signals.

# Hardware Setup

## Wiring

The JAGXTREME terminal's PROFIBUS option card has two possible connections: a DB-9 connector or a five-position removable terminal strip to connect to the PROFIBUS network interface. Most installations use the DB-9 connector. Cable distance, type, and termination are specified by PROFIBUS. (See the PLC documentation for cable design guidelines for the various PLCs). An adapter harness, PN 0900-0311-000, which provides an external DB-9 connection for general purpose and harsh environment JAGXTREME terminals is available. Note: The adapter harness is not suitable for network speeds above 1.5 Mb.

Female DE-9

| | |
|---|---|
| 1 | N.C. |
| 2 | N.C. |
| 3 | TX/RX+ (COM A) |
| 4 | RTS |
| 5 | GND (isolated) |
| 6 | +5v (isolated) |
| 7 | N.C. |
| 8 | TX/RX- (COM B) |
| 9 | N.C. |

Terminal strip

| | |
|---|---|
| 1 | RTS |
| 2 | TX/RX+ (COM A) |
| 3 | TX/RX- (COM B) |
| 4 | +5v (isolated) |
| 5 | GND (isolated) |

Adapter Harness wiring

| Terminal number | | Color |
|---|---|---|
| | 1 | Yellow |
| | 2 | Blue |
| | 3 | Green |
| | 4 | Red |
| | 5 | Black |
| Chassis GND | | Green (shield) |

## JAGXTREME PROFIBUS Option PCB

The JAGXTREME terminal's PROFIBUS option card has three jumpers. They should not be changed from their default positions. The default positions are as follows:

| | |
|---|---|
| W1 | installed |
| W2 | installed |
| W3 | IRQ3 (I3) position |

# Software Setup

You must enter setup and configure each scale that is interfaced with the PROFIBUS network.

The JAGXTREME terminal automatically detects the presence of a PROFIBUS option card if one is installed, and adds the setup parameters to the options block. To configure the terminal for PROFIBUS, enter Setup and advance to the CONFIGURE OPTIONS sub-block.

## Scale Setup Sub-Block

Reset to Factory returns all parameters for this block to their original settings. You cannot reset a single value or specify only a few of the sub-block values.

Local refers to a scale in the same terminal as the PROFIBUS option. Remote refers to a scale interfaced across Ethernet.

The divisions display option is useful for heavy capacity scales that exceed the ± 32767 range of a signed integer in displayed weight units.

The Scale Setup block lets you specify how the PROFIBUS interface is used. Several options are available to correspond with your system setup.

To configure the block:

Press **ENTER** at the **PROFIBUS** prompt to access the program block.

Press **ENTER** at the **Scale Setup** prompt. At the **Data Format?** prompt, press **SELECT** to choose the desired weight display option:

**Wgt**—displays scale weight in the selected weight unit (lb, kg, or g).

**Div**—displays scale weight in display divisions. The PLC multiplies the display divisions by the increment size to calculate the weight in display units.

**Ext**—displays scale weight in the extended 21 signed bit format.

**Flt---**displays weight in floating point data format

Please refer to the Discrete Read and Discrete Write tables in this manual for additional information on mapping of discrete read data to the PLC.

- At the **Nbr of Scales?** prompt, press **SELECT** to display the number of scales to be interfaced (1, 2, 3, or 4).
- At the **Scale N?** prompt, press **SELECT** to indicate if the designated scale is local or remote.
- For remote scales, select the terminal number at the **Node?** prompt.
- At the **Internal Scale?** prompt, identify each scale as A, B, C or D.
- Press **ENTER** to continue to the next sub-block. Press **ESC** to exit setup mode.

## Node Communications Sub-block

This manual does not attempt to give all information and configuration parameters for a PROFIBUS network. Please refer to the PLC documentation for more information on specific network performance.

This sub-block lets you enter the PROFIBUS network communication parameters. The JAGXTREME terminal programs the Node Adapter Chip with these parameters.

- Press **ENTER** at the **Node Communicate** prompt to configure communications parameters.
- At the **Rack Address?** prompt, use the numeric keys to input the node address (0-126), then press **ENTER**.

## Reset to Factory Sub-block

You can reset all of the parameters for this program block to the original default values.

To reset the program block parameters:

- Press **ENTER** at the **Reset to Factory** prompt.
- At the **Are You Sure?** prompt, press **SELECT** to highlight **Y(es)** to confirm and reset the values to factory defaults, or select **N(o)** if you do not wish to reset the values.
- Press **ESCAPE** to exit the sub-block.
- Press **SELECT** to continue to another program block if desired.

## PROFIBUS GSD or Type Files

There are eight configurations of the PROFIBUS GSD or type file for the JAGXTREME terminal's different combinations of data formats. The length of the messages is different for each of the data formats, but the length of the input and output messages are the same within each format. The JAGXTREME supports the following message types:

| Length | Functionality |
|---|---|
| 4 bytes (2 words in/ 2 words out) | One scale in int, div, or ext |
| 8 bytes (4 words in/ 4 words out) | Two scales in int, div, or ext |
| 12 bytes (6 words in/ 6 words out) | Three scales in int, div, or ext |
| 16 bytes (8 words in/ 8 words out) | Four scales in int, div, or ext; OR One or two scales in flt |
| 24 bytes (12 words in/ 12 words out) | Three scales in flt |
| 32 bytes (16 words in/ 16 words out) | Four scales in flt |
| 56 bytes (28 words in/ 28 words out) | Four scales in flt, int, div, or ext with |

The PROFIBUS GSD files for the JAGXTREME are available free of charge. They can be ordered from METTLER TOLEDO in a kit, PN 0917-0250, which also includes a .200 file for ET200 applications. The GSD file can also be downloaded free of charge from the PROFIBUS website: www.profibus.com.

# Troubleshooting

### JAGXTREME Terminal's PROFIBUS Option PCB Status Lights

The PROFIBUS option PCB has two status LEDs that indicate network port activity.

# PROFIBUS PCB Parts

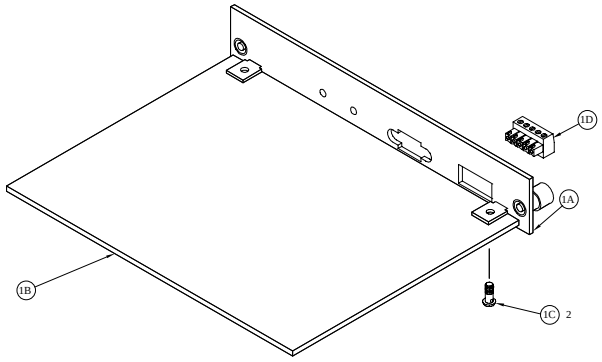


| Ref # | Part Number | Description | QTY |
|---|---|---|---|
| 1A | (*)14517000A | I/O Plate | 1 |
| 1B | (*)14688900A | PCB, PROFIBUS (w/o Hardware) | 1 |
| 1C | R0511100A | Screw, M4 X 10 Taptite | 2 |
| 1D | (*)14374900A | Connector, 5-Position Terminal Block | 0** |
| * | (*)14517100A | PROFIBUS PCB Panel Assembly | 1 |

* Includes all parts listed above as an assembly.

** Included with Pigtail Adapter Kit 0900-0311

(*) May have a revision level prefix

# Siemens Simatic S5 Setup Example

The IM 308-C Hardware Interface Card in the Siemens S5 PLC supports the PROFIBUS Interface. The IM 308-C is configured with a FLASH card that is programmed on a PC.

## COM ET 200 Software

Note: A copy of a self-extracting ZIP file named ME6713.EXE is available from the technical support BBS (614) 841-5169. This file is located in the JAGXTREME LIB and contains both Windows® and DOS® type files. It is also available from the PROFIBUS website: http://www.profibus.com

The COM ET 200 Program runs under PC Windows 3.1 to build the IM 308-C configuration and write it to the FLASH card. An example setup is as follows.

*JAGXTREME Type File Example*

Comment: JAGXTREME

Order No.: blank for now

Station Type: JAGXTREME

Manufacturer: METO

Family: JAGXTREME

Periphery: JAGXTREME

ASCI Type: SPC3

Manufacturer ID: 6713 (METO6713.GSD) This is in hex.

Min. Cycle: default

Programmable via bus: no

SYNC-able: No

FREEZE-able: No

Modular Station: No

Active Station: No

Even number of Slots: No

Baud Rates: Baud rates from 9.6K baud to 12 Mbaud, inclusively.

Slots

Max. number of inputs: 56 bytes

Max. number of outputs: 56 bytes

Max. address ID's: 16

Number of diagnostics: 7 bytes

Number of parameter: 7 bytes

Predefined bytes: none

Predefined IDs: none

*Configuration File Sample*

**Bus Designation**: PROFIBUS-DP

Bus Profile: PROFIBUS-DP

Baud: 12000 kBaud

Repeater on Bus: No

Parameters: Use Defaults

**Host Designation**: HOST System 1

Host Type: S5-115U/H / CPU942B

Reserve address areas for inputs

Start: P000

End: P027

Reserve address areas for outputs

Start: P000

End: P027

Power up delay: 20 seconds

**Master Parameters**

Station designation: Master System 1

Station type: IM 308-C

In host: Host System 1

Addressing: Linear

Number of IM 308-C: 0

Station number: 1

Multiprocessor mode: no

Defaults

Error Reporting Mode: QVZ

Response Monitoring for slaves: yes

**JAGXTREME Station 1 Parameters**

**Family:** JAGXTREME (from JAGXTREME type file)

**Station Type:** JAGXTREME (from JAGXTREME type file)

**Parameters**

Line 0

ID: 8A1

Type: Inputs

Length: 8

Format: Word

I Addr: P028

Line 1

ID: 8AO

Type: Outputs

Length: 8

Format: Word

O Addr: P028

Designation: none

Response Monitoring: yes

Error Reporting: QVZ

Station Number: 5

*JAGXTREME Station 2 Parameters*

Family: JAGXTREME (from JAGXTREME type file)

Station Type: JAGXTREME (from JAGXTREME type file)

Parameters

Line 0

ID: 8A1

Type: Inputs

Length: 8

Format: Word

I Addr: P044

Line 1

ID: 8AO

Type: Outputs

Length: 8

Format: Word

O Addr: P044

Response Monitoring: yes

Error Reporting: QVZ

Station Number: 6

# TI545 Setup Example

Older TI Series 505 PLCs use a hardware Field Interface Module (FIM) to implement the PROFIBUS-DP protocol. The FIM L2-DP allows the TI PLCs to interface to L2-DP I/O as if each slave were an I/O module in a remote base. After you configure the base and assign I/O address points to each slot, the I/O is automatically updated with the I/O from the slave. The FIM operates at baud rates from 9600 to 1.5 megabits per second.

## Switch Settings

Refer to the SIMATIC TI505 Field Interface Module User Manual for complete setup details.

### Setting Base Address

Switch 1 on the front panel of the FIM selects the desired base address. For example, set SW1 to 1 for base 1, 2 for base 2.

### Setting Baud Rate

Switch 2 on the front panel of the FIM selects the proper communications baud. For example, setting SW2 to 0 selects 1.5 megabits per second

### Slave Address Range Selection

The S3-5, S3-6, and S3-7 switches on the FIM board are used for the slave address range selection. Each FIM can address 16 nodes out of the L2-DP maximum 126 nodes. These switches select a 16 node address range for the FIM. For example, when all three switches are in the Closed/On/0 position, the FIM module references slave addresses 17 through 32. In the configuration menus, slave addresses 17 through 32 then correspond to slots 1 through 16 for the particular base.

## TISOFT 2 Software

TISOFT™ 2 software runs on a PC and configures the I/O addresses for slave devices connected to the FIM base over L2-DP. Refer to the SIMATIC TI505 TISOFT 2 User Manual. TISOFT communicates to the TI Series 505 PLC over a Serial RS232C communications link.

The FIM identifies and reports slaves in terms of I/O points. You must assign I/O addresses before the FIM will update them. When the slaves are configured properly, the assigned input points will immediately be updated with data from the slave, and the output points will be written to the slave.

Menu selections in TISOFT allow you to configure the I/O points (or addresses). At the main menu selection, select ONLINE or OFFLINE, then select CONFIO. Select the base, 1 through 16, corresponding to the base selected by Switch 1 on the FIM base. Then select CONFIG the base. There are 16 slots within each base where each slot corresponds to a consecutive PROFIBUS node address.

TISOFT™ of Texas Instruments

For the JAGXTREME terminal, all I/O addresses at the TI505 PLC are WORD I/O addresses. In TI terminology, these are WX addresses for input words and WY addresses for output words. Each PROFIBUS node can support up to four scales - two local and two remote. Each scale requires two input words and two output words. To configure a terminal with four connected scales, you must configure 8 WX's and 8 WY's in TISOFT for the FIM base. TISOFT requires you to configure the beginning address and the number of WX's and WY's for each slot. For example, when configuring three terminals on a single PROFIBUS link with node addresses 17, 18, and 19, each host JAGXTREME supports four scales - two local and two remote.

Then, the following is a possible I/O address configuration mapping.

| Slot | Address | # WX's | # WY's |
|---|---|---|---|
| 1 | 0001 | 8 | 8 |
| 2 | 0017 | 8 | 8 |
| 3 | 0033 | 8 | 8 |

Once the I/O address table is configured, you need to run TISOFT in ONLINE mode to write the new configuration to the FIM base.

# Sample Conversion of IEEE Floating Point Format into Siemens S5 Floating Point Format

This is a sample S5 PLC routine for converting an IEEE floating point number to a Siemens S5 PLC floating point number.

IEEE-Format

bit 31 Sign of the mantissa

bits 30-23 Value of the exponent+127. To determine value of the exponent, 127 must be deducted.

bits 22-0 Mantissa. Value of the fraction g. Only the fraction g is stored instead of 1+g.

Example: Instead of the value 1.2345, only .2345 is stored in the mantissa.

S5-Format

bits 31-24 Value of the exponent in 2's complement.

bits 23-0 Value of the fraction g in 2's complement. In S5-format, g is stored.

When in S5-format, the value of the mantissa does not consist of 1+g. Something must be computed since the value of g in the S5-format must always be less than 1.

**Solution:**

The value of the IEEE mantissa will be divided by 2 to make it less than 1. Consequently, the value of the exponent will be increased by 1.

(1 + gIEEE) / 2 = 0.5 + gIEEE / 2 = gS5

The fraction gS5 of the S5-mantissa will be calculated from the formula above.

**Implementation:**

The addend gIEEE/2 is implemented by shifting the IEEE mantissa one place to the right

The addend 0.5 is implemented by setting bit 22 in the S5 mantissa.

Now that the mantissa has been divided by 2 the exponent must be increased by 1.

For formatting, do the following.

127 must be subtracted from the IEEE exponent

The IEEE exponent must be shifted to the appropriate position in the S5-format

Based on the description of the mantissa as 1 + g, whereby only g is stored, the value of the exponent in S5-format must be incremented by 1. If the sign of the IEEE mantissa is set to 1, the 2's complement must be created. Description of the functional building blocks:

The to-be-converted IEEE floating point value must be placed in MD 200

The converted S5 floating point value can be fetched from MD 220

Sample S5 Code:

```
Name      :S7INS5
  :L      MW 200     START
  :SVD               7    IEEE EXPONENT TO BYTE 0 IN
ACCUMULATOR
  :L      KF +126
  :-F                EXPONENT IS NOW IN S5 FORMAT
  :T      MB 230     EXPONENT IS STORED IN MB 230
  :
  :                  CALCULATE MANTISSA
  :L      MD 200
  :SVD               1 SHIFT BY 1 TO THE RIGHT
  :T      MW 222     STORE BYTES 3&4 IN MW 222
  :SVD                    16     BYTE  2 TO 4 IN
ACCUMULATOR
  :L      KH 003F    SET BITS 6&7 TO 0
  :UW
  :L      KH 0040    SET BIT 6 TO 1
  :OW                  ALL OTHER BITS REMAIN
  :T      MB 221     STORE IN MB 221
  :
  :L      MB 200     MANTISSA IS CHECKED FOR SIGN
  :L        KH 80
  :<=G
  :SPB    =EXP         IF POSITIVE, THEN OK
  :
  :L      MD 220     IF NEGATIVE, DETERMINE 2'S COMPLEMENT
  :KZD
  :T      MD 220
  :
EXP:L     MB 230     EXPONENT CORRECTLY PLACED
  :T      MB 220
  :L      MD 220
  :B
```

# 3 Dual Analog Output Option Card

## JAGXTREME Terminal Dual Analog Output PCB

**WARNING**

**WHEN THIS EQUIPMENT IS INCLUDED AS A COMPONENT PART OF A SYSTEM, THE DESIGN MUST BE REVIEWED BY QUALIFIED PERSONNEL WHO ARE FAMILIAR WITH THE CONSTRUCTION AND OPERATION OF ALL COMPONENTS IN THE SYSTEM AND THE POTENTIAL HAZARDS INVOLVED. FAILURE TO OBSERVE THIS PRECAUTION COULD RESULT IN BODILY INJURY.**

The Dual Analog Output option kit provides a two-channel isolated 4-20 mA or 0-10 VDC analog signal output for gross weight or displayed weight. The outputs will be low when the displayed weight is at zero. When the displayed weight reaches maximum capacity, the outputs will increase to the maximum (20 mA or 10 VDC). Any weight between zero and full capacity will be represented as a percentage of the output proportional to the percentage of full scale capacity.

The Analog Output sub-block lets you select the data source and calibrate analog zero and full-scale values. The JAGXTREME terminal must be calibrated to the desired scale before making Analog Output adjustments. The Analog Output card has two channels. Channel 1 is typically assigned to Scale 1; Channel 2 to Scale 2 (if a second scale is being used). In setup, you can assign the scale source of the analog output values to the output channel.

Data sources may be weight, rate, or JAGBASIC output.

## Specifications

**Maximum Cable Length**: 0-10 VDC - 50 ft (15.2 m)

4-20mA – 1000 ft (300 m)

**Recommended Load:**

**Resistance:** 0-10 VDC - 100k ohms minimum
4-20 mA - 500 ohms maximum

**Outputs:** 2 channels capable of supplying 4-20 mA or 0-10 VDC.

Note: If the load resistance ratings are exceeded, the analog output will not operate properly.

# Installation

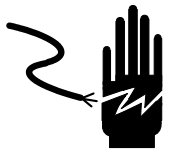

**WARNING**

DISCONNECT ALL POWER TO THIS UNIT BEFORE REMOVING THE FUSE OR SERVICING.

**CAUTION**

OBSERVE PRECAUTIONS FOR HANDLING ELECTROSTATIC SENSITIVE DEVICES.

**WARNING**

DO NOT APPLY POWER TO THE JAGXTREME TERMINAL UNTIL INSTALLATION OF COMPONENTS AND EXTERNAL WIRING HAVE BEEN COMPLETED.

To install the Analog Output option card in the JAGXTREME terminal:

- Disconnect AC power to the JAGXTREME terminal.
- Remove the JAGXTREME terminal rear panel if installing in a general purpose or harsh environment unit. On the panel mount version only, remove the cover plate from an open slot on the rear of the JAGXTREME terminal.
- Insert the Analog Output option card in an open slot in the rear of the terminal. Seat the card by inserting it into the slot, then tighten the thumbscrews finger tight.
- Connect the external wiring to the Analog Output card outputs.
- Install the rear covers on the general purpose or harsh environment versions.
- Power up the terminal. The JAGXTREME terminal will recognize the new option card automatically.

# Setup In the JAGXTREME Terminal

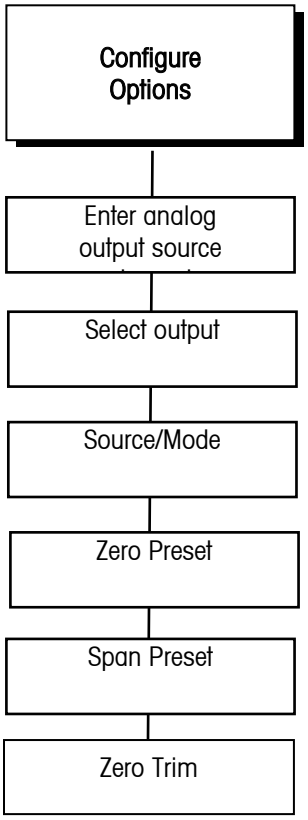


The target weight must be entered in primary units.

The target weight must on the scale before making Zero or Span Trim adjustments.

The target weight must on the scale before making Zero or Span Trim adjustments.

To configure the Analog Output option card:

- With power to the JAGXTREME terminal removed, connect a volt or current meter to the appropriate output. If the customer's device is already connected, the meter is not necessary.
- Apply power to the terminal and enter Setup. Press **ENTER** at the **Configure Options** prompt to access the sub-block.
- Press **ENTER** at the **Analog Output** prompt, then select the channel for the data source.
- At the **Output Channel** prompt, press **ENTER** to select channel 1, 2, 3 or 4.
- Press **ENTER** at the **Source?** prompt. At the **Mode?** prompt, select gross weight display, displayed weight, rate or JagBASIC output as the data source for analog output. Press **ENTER**.
- Press **ENTER** at the **Zero Preset** prompt, then enter the actual weight value at which the analog output is to equal 0VDC or 4mA.
- Press **ENTER** at the **Span Preset** prompt, then enter a weight value for the analog output to use as the full scale value.
- Place the weight on the scale (or adjust for the correct displayed weight on a simulator prior to entering Setup) at which the Analog Output is to equal 0VDC or 4mA.
- Press **ENTER** at the **Zero Trim** prompt. At the **Coarse** prompt, press the **MEMORY** key to increase the output, or press the **FUNCTION** key to decrease the output. Observe the meter or customer device. Continue to adjust the output until either the correct reading or the closest reading available using coarse adjust displayed. Press **ENTER** when the desired adjustment is displayed or fine adjust is required.
- At the **Fine** prompt, press the **MEMORY** key to increase the output, or press the **FUNCTION** key to decrease the output. Press **ENTER** when the desired adjustment is displayed.
- Place the weight on the scale (or exit setup and adjust for the correct displayed weight on a simulator) at which the Analog Output is to equal 10 VDC.
- Press **ENTER** at the **Span Trim** prompt, then at the **Coarse** prompt, press the **MEMORY** key to increase the output, or press the FUNCTION key to decrease the output. Press **ENTER** when the desired adjustment is displayed.
- At the **Fine** prompt, press the **MEMORY** key to increase the output, or press the **FUNCTION** key to decrease the output. Press **ENTER** when the desired adjustment is displayed.
- See the Appendix for more information on using JagBASIC as the source for the Analog Output.

# Wiring

**WARNING**

DO NOT APPLY POWER TO THE TERMINAL UNTIL INSTALLATION OF COMPONENTS AND EXTERNAL WIRING HAVE BEEN COMPLETED.

**WARNING**

IF THIS DEVICE IS USED IN AN AUTOMATIC OR MANUAL FILLING CYCLE, ALL USERS MUST PROVIDE A HARD WIRED EMERGENCY STOP CIRCUIT OUTSIDE THE DEVICE CIRCUITRY. FAILURE TO OBSERVE THIS PRECAUTION COULD RESULT IN BODILY INJURY.

The maximum recommended cable length for the 0-10VDC output is 50 feet (15.2 meters). The maximum recommended cable length for the 4-20 mA output is 1000 feet (300 meters). The recommended cable for use with the analog output is shielded 2-conductor stranded 20 gauge cable (Belden #8762 or equivalent) which is available from METTLER TOLEDO using part number 510220190.

Wire to **CHAN A** for Scale 1 and to **CHAN B** for Scale 2 as follows:

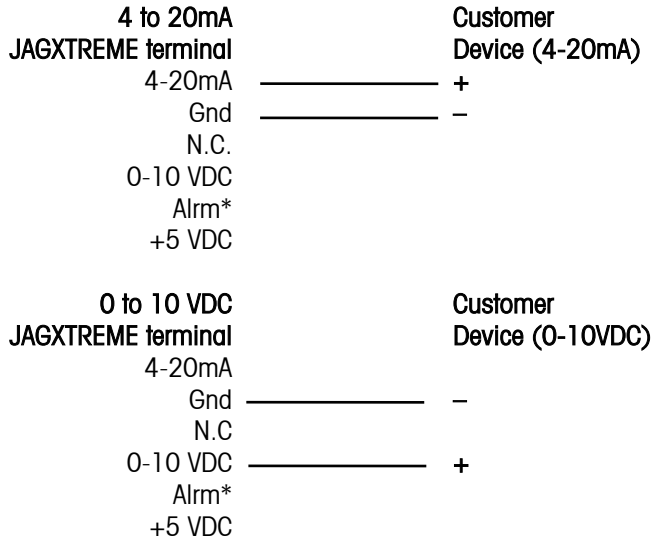


*The ALRM Output (Alarm) is a normally open connection to the GND terminal during normal operation. If the weight display goes to an over capacity or under zero display the connection closes and the ALRM Output will be capable of sinking up to 30mA DC. The voltage source can be the +5V supplied with CHAN 1 or 2 of the Analog Output PCB or a maximum of +30VDC external source.

# Dual Analog Output PCB Parts

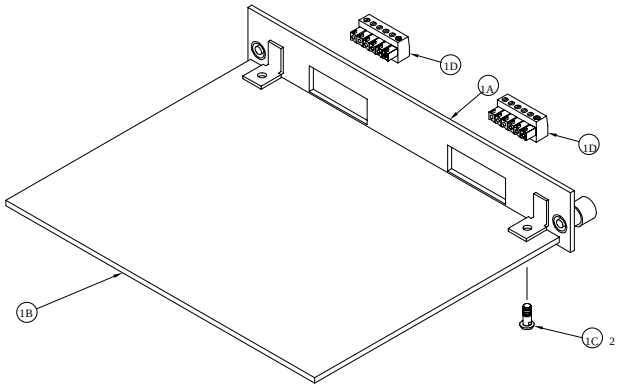


| Ref # | Part Number | Description | QTY |
|---|---|---|---|
| 1A | (*)14547400A | I/O Plate, Dual Analog | 1 |
| 1B | (*)14095000A | PCB, Dual Analog Output (w/o Hardware) | 1 |
| 1C | R0511100A | Screw, M4 X 10 Taptite | 2 |
| 1D | (*)13162500A | Connector, 6-Position Terminal Block | 2 |
| * | (*)14164100A | Dual Analog Output PCB Panel Assembly | 1 |

* Includes all parts listed above as an assembly.

(*) May have a revision level prefix.

For your notes

# 4 Modbus Plus Option Card

## Overview

Modbus Plus is a local area network designed for industrial control applications. The network enables Modicon Model 984 programmable controllers, host computers, JAGXTREME terminals, PANTHER terminals, and other devices to communicate throughout the production areas of an industrial plant. It supports 64 addressable node devices at a data transfer rate of one million bits per second. Up to 32 devices can connect directly to a network cable with a length of up to 1500 feet.

The JAGXTREME Modbus Plus interface is an option card that plugs into the JAGXTREME terminal. It has a "peer processor" that implements the network protocol; an FM encoder/decoder; and an RS485 driver that provides the interface to the Modbus Plus network. The interface card is a single Modbus Plus node. The hosting JAGXTREME terminal can support up to four scales within the node. The scales can be any combination of local or remote scales in a JAGXTREME terminal cluster.

## Communication

Point-to-point communication in the Modbus Plus network is the communication between two network nodes. The "Master Task" at the PLC initiating node generates a "transaction query" for the "Slave Command Handler Task" at the destination JAGXTREME node. The Slave Command Handler Task sends a "transaction response" to the transaction query. Peer Processors route the messages through the network.

The Modbus Plus PLC acts as the Master Task. The JAGXTREME terminal has the Slave Command Handler Task. The PLC initiates all transactions. The JAGXTREME terminal responds to the transaction queries.

The general format for Modbus transaction query command is a one-byte command followed by a group of data or function bytes. The maximum message length is 252 bytes. The function bytes tell the slave device what action to perform.

The JAGXTREME terminal supports the following Modbus functions:

**03 Read Holding Registers**
This function requests the value of one or more 16-bit holding registers.

**16 Preset Multiple Registers**
Place values into a series of consecutive holding registers.

The transaction query messages contain register values that specify what data that the PLC is requesting from the JAGXTREME terminal. For example, if the PLC issues Function 03, the data field must contain information telling the JAGXTREME terminal what register number to start at and how many registers to read. All address references within the Modbus messages are relative to zero. For example, the first holding register in the Modicon 984 PLC is 40001, but has the value 0000 in the messages.

The JAGXTREME terminal must be set up in one of the "integer" weight data modes or in the "floating point" weight data mode. These modes are mutually exclusive, that is, the Modicon PLC can request either integer weight data or the floating point weight data, but cannot request both interchangeably in the same JAGXTREME terminal setup.

## Node/Rack Address

Each Modbus Plus option card represents one physical node but may contain data for multiple scales. The node address is chosen by the system designer, setup in the terminal, and programmed into the PLC. The JAGXTREME terminal's node address is set up via the DIP switches located on the Modbus Plus Option card. The node address and input and output registers used to communicate between the terminal and the PLC are programmed into the PLC by using its programming software (using MSTR function). The terminal setup capabilities allow viewing of the logical rack (node) address and selection of data format and number of scales using the node. The terminal will determine the number of input and output registers needed for the number of configured scales and chosen data format. The PLC must be configured to use the same amount of space and the correct registers in the MSTR function for the appropriate data format.

## Data Formats

The Modbus Plus option card has two types of data exchanges: discrete data and shared data. Each scale selected to pass data through the JAGXTREME terminal's Modbus Plus option has its own input and output registers to communicate continuously with the PLC. Shared data access is used to pass information that cannot be sent by the discrete data because of size or process speed limitations and uses additional input and output register space. See the Data Definition section for information on the available data formats.

## Remote Scale Sharing

The JAGXTREME terminal's Ethernet feature makes it possible for a JAGXTREME terminal to communicate with other JAGXTREME terminals and to share resources. This allows one terminal with the Modbus Plus option card to collect information from up to four networked and local scales when using any of its data formats. The Ethernet connection also allows the terminal to share information with other networked equipment.

## Possible Configurations for JAGXTREME Terminal to PLC Systems

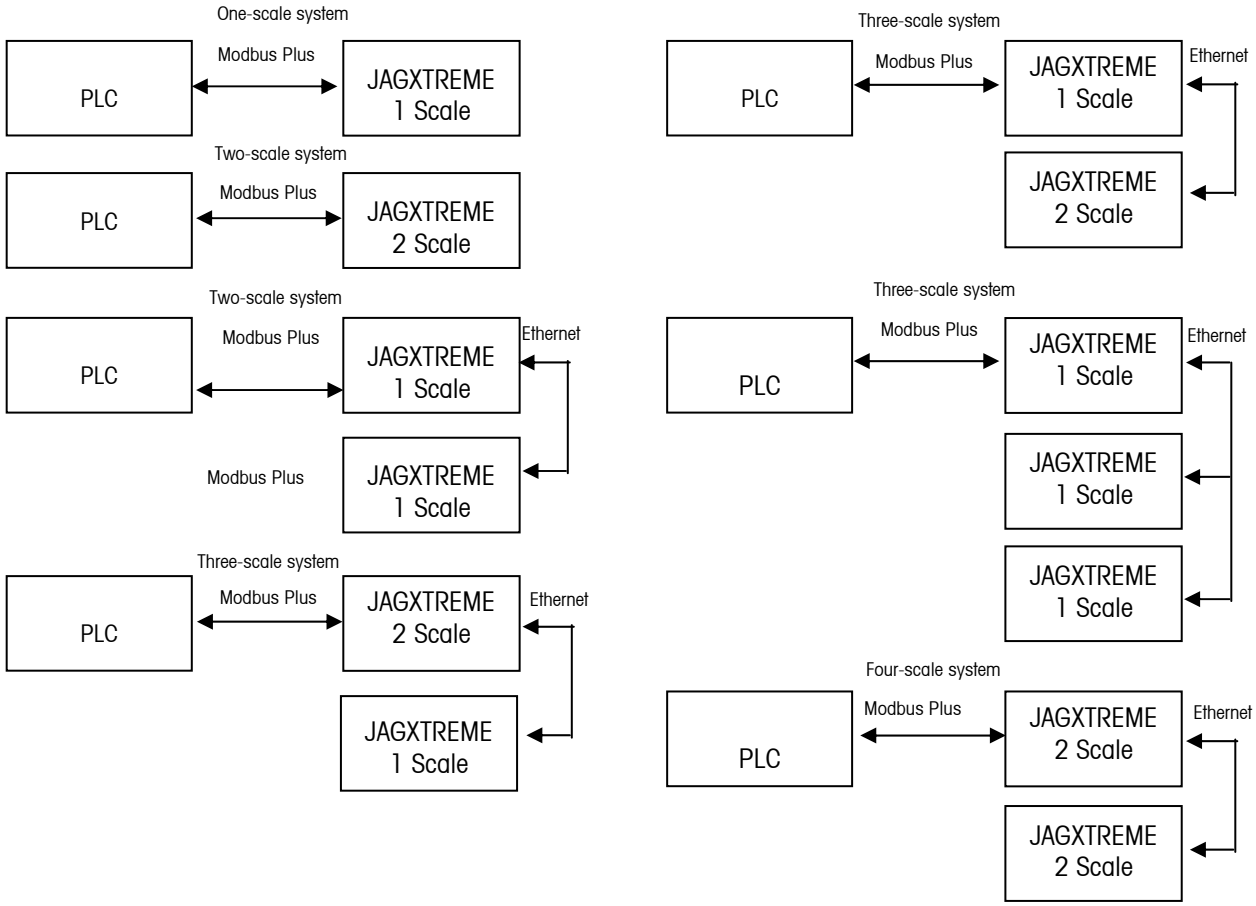


## Possible Configurations for JAGXTREME Terminal to PLC Systems

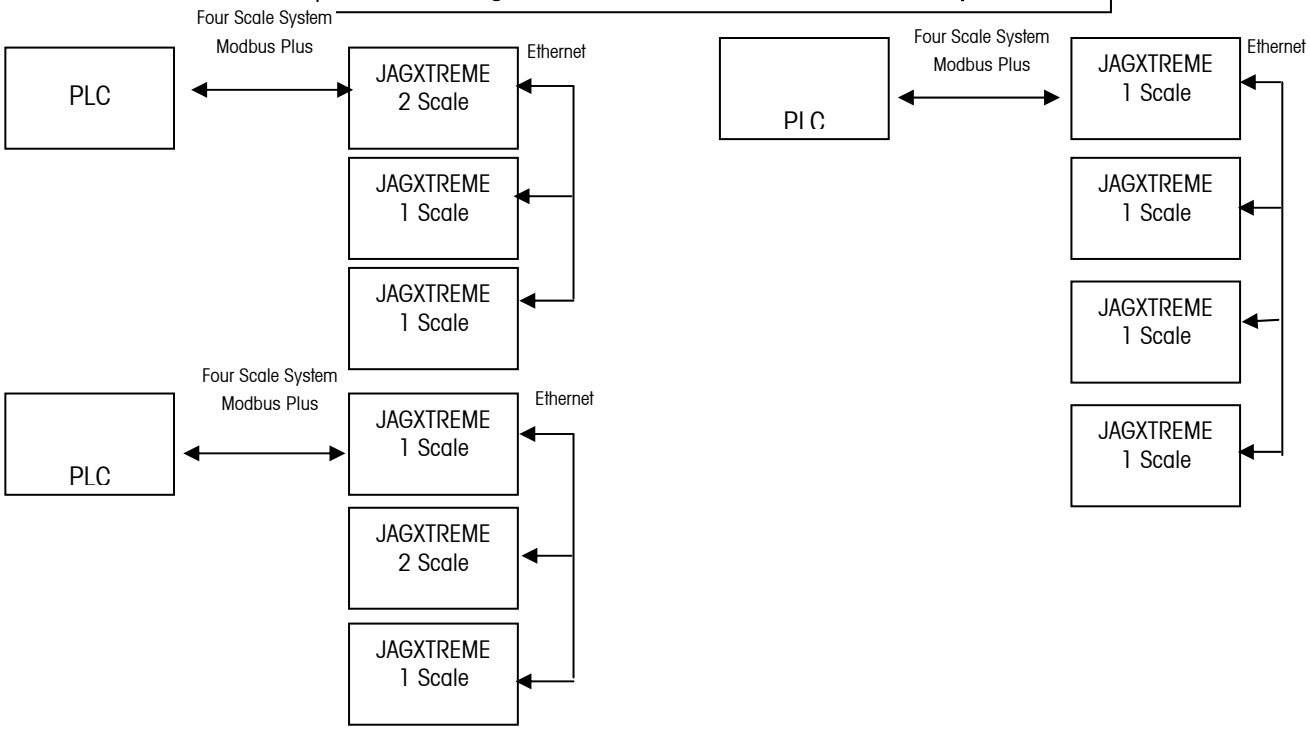

Without Shared Resources

## Possible Configurations for JAGXTREME Terminal to PLC Systems

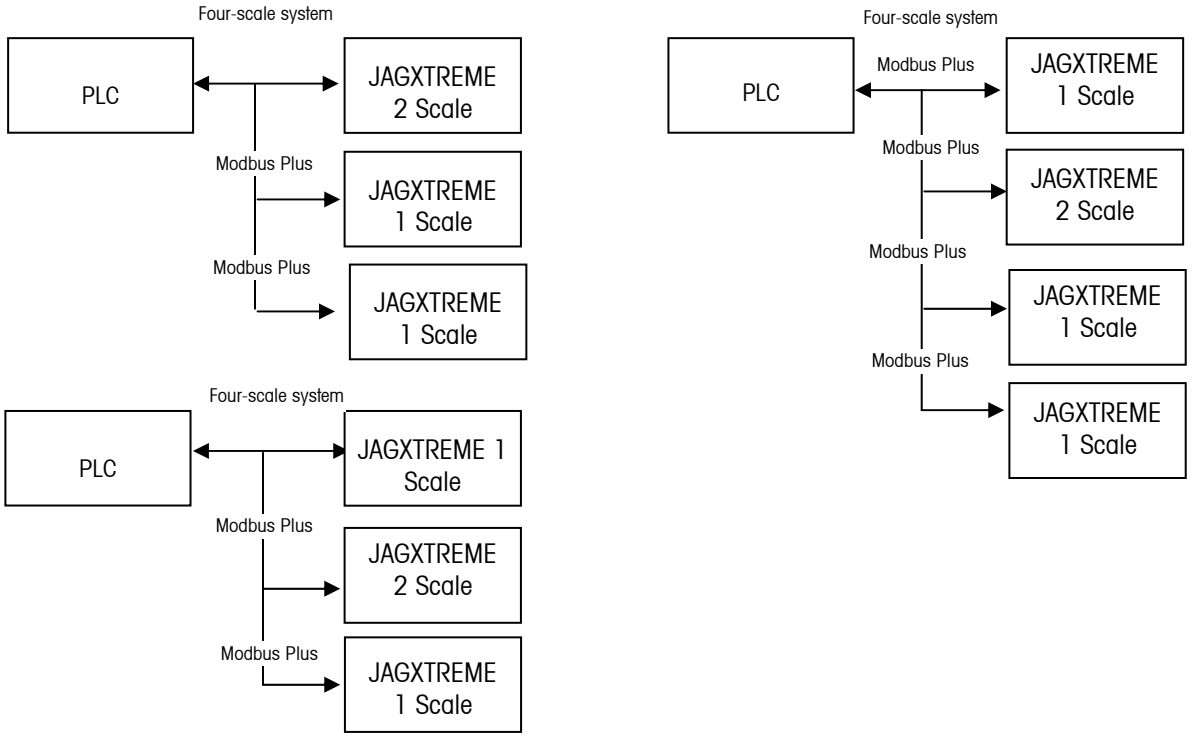


## Possible Configurations for JAXTREME Terminal to PLC Systems

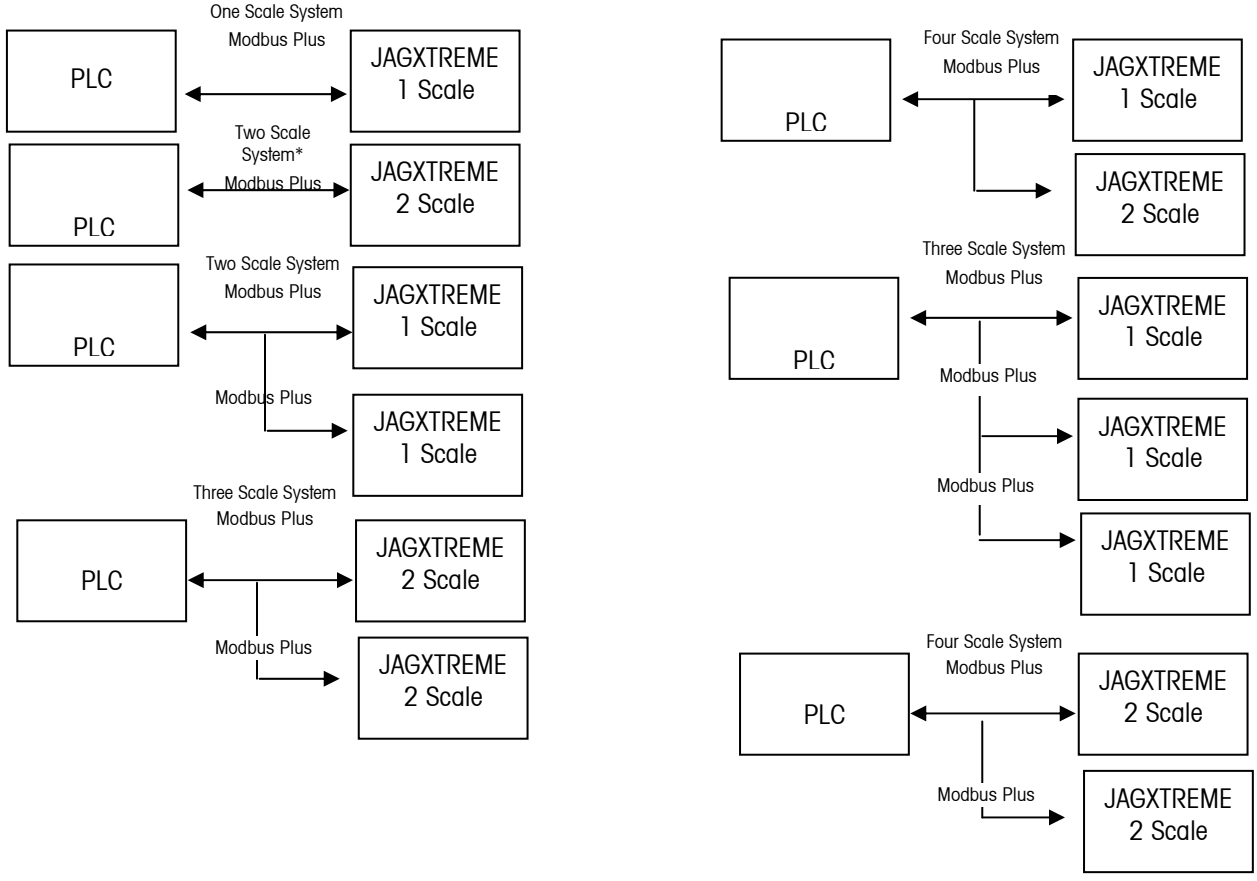

# Data Definition

The JAGXTREME terminal's Modbus Plus option card uses two types of data for communicating with the PLC, discrete data and shared data. Separate discrete data for each scale is always available. The data transfer is accomplished via the PLCs MSTR function (or use of the global data functionality). If the shared data is used, it is provided in addition to the discrete data for each scale.

## Data Integrity

The JAGXTREME terminal has specific bits to allow the PLC to confirm that the data was received without interruption and with the scale not in an error condition. It is important to monitor these bits. Any PLC code should use them to confirm the integrity of the data received for the scale. Refer to the detailed data charts for specific information regarding the Data OK, update in progress, and data integrity bits and their usage.

## Discrete Data

There are four formats of discrete data available with the Modbus Plus option card. Only one data format may be selected and used by scales sharing the same card.

- The **integer** (wgt) and **division** (div) formats allow bi-directional communication of discrete bit encoded information or 16-bit binary word (signed integer) numerical values.
- The **extended** (ext) integer format allows bi-directional communication of discrete bit encoded information, 21-bit binary word (signed extended integer) numerical read values or 16-bit binary word (signed integer) numerical write values.
- The **floating point** (flt) format allows bi-directional communication of discrete bit encoded information or numeric data encoded in IEEE 754, single precision floating point format.

The format of discrete data affects the amount of input/output register space required per scale and the total input/output registers used by the Modbus Plus option card. Integer, division, and extended integer formats require two 16-bit words of input and two16-bit words of output data per scale. One scale would use two 16-bit registers of input and two 16-bit registers of output. Two scales would use four16-bit registers of input and four 16-bit registers of output. Three scales would use six 16-bit registers of input and six 16-bit registers of output. Four scales would use eight 16-bit registers of input and eight 16-bit registers of output.

The floating point format requires more space per scale because floating point data uses two 16-bit words of data to represent just the numeric data. The floating point format requires four 16-bit registers of input and four 16-bit registers of output data per scale. The smallest amount that the terminal can configure for floating point is eight registers of input and eight registers of output. This means that when a single scale is configured, there are two sets of input/output data for the scale. Four scales using the floating point format would use 16 registers of input and 16 registers of output data. Shared data would require additional space, if used.

Format selection depends on different issues. First, the range or capacity of the scale used in the application should be considered. The integer format can represent a numerical value of up to 32,767; the division format can represent a numerical value of up to 32,767 divisions (or increments); the extended integer can represent a numerical value of over 1,000,000; and the floating point format can represent a numerical value encoded in IEEE 754, single precision floating point format.

Floating point is the only format that includes decimal point information as a part of its data. All the other formats ignore decimal points in their data. Accommodation of decimal point location must take place in the PLC logic, when it is needed with these formats.

For example:

250 x .01 scale

| | | | | |
|---|---|---|---|---|
| Scale reads: | 0 | 2.00 | 51.67 | 250.00 |
| Format sent: | | | | |
| Int | 0 | 200 | 5167 | 25000 |
| Div | 0 | 200 | 5167 | 25000 |
| Ext | 0 | 200 | 5167 | 25000 |
| FLT | 0 | 2.00 | 51.67 | 250.00 |

Any of the formats could be used in this case

50,000 x 10 scale

| | | | | |
|---|---|---|---|---|
| Scale reads: | 0 | 200 | 5160 | 50000 |
| Format sent: | | | | |
| Int | 0 | 200 | 5160 | -(xxxxx) |
| Div | 0 | 20 | 516 | 5000 |
| Ext | 0 | 200 | 5160 | 50000 |
| FLT | 0 | 200 | 5160 | 50000 |

The integer format could not be used because it would send a negative value once the weight exceeded 32,760.

150 x .001 scale

| | | | | |
|---|---|---|---|---|
| Scale reads: | 0 | 2.100 | 51.607 | 150.000 |
| Format sent: | | | | |
| Int | 0 | 2100 | -(xxxxx) | -(xxxxx) |
| Div | 0 | 2100 | -(xxxxx) | -(xxxxx) |
| Ext | 0 | 2100 | 51607 | 150000 |
| FLT | 0 | 2.100 | 51.607 | 150.000 |

The integer and division formats could not be used because they would send a negative value once the weight exceeded 32.767.

There is another special requirement for the extended integer format. Since PLCs do not have any mechanism to interpret 21 bit signed integers, a few rungs of ladder logic are needed to convert the bit data into a floating point value.

Another issue is the type of information that must be communicated between the terminal and PLC for the application. Because the floating point format has more space for its data, it also has additional information that can be sent or received especially if the shared data access is included. Please see each format's detailed description of the data available to determine which is most suitable for the specific application.

# Discrete Data I/O Space Usage Comparison

The following tables show a comparison of the integer, division, extended integer, floating point, and shared data formats' input and output data usage.

The table below shows a comparison between the integer data formats and the floating point format of the input data:

Input Data (from JAGXTREME terminal to PLC with node configured to address inputs 0- XX)

| Address Word # | Integer, Division, or Extended Integer | Floating Point |
|---|---|---|
| IW:0 or WX:0 | 1st Scale (weight) | 1st Scale command response |
| IW:1 or WX:1 | 1st Scale (status) | 1st Scale floating point |
| IW:2 or WX:2 | 2nd Scale (weight) | Value |
| IW:3 or WX:3 | 2nd Scale (status) | 1st Scale status |
| IW:4 or WX:4 | 3rd Scale (weight) | 2nd Scale command response* |
| IW:5 or WX:5 | 3rd Scale (status) | 2nd Scale floating point* |
| IW:6 or WX:6 | 4th Scale (weight) | Value |
| IW:7 or WX:7 | 4th Scale (status) | 2nd Scale status* |
| IW:8 or WX:8 | | 3rd Scale command response |
| IW:9 or WX:9 | Shared Data Access Status | 3rd Scale floating point |
| IW:10 or WX:10 | Shared Data Read Field Value** | Value |
| IW:11 or WX:11 | Shared Data Read Field Value** | 3rd Scale status |
| IW:12 or WX:12 | Shared Data Read Field Value** | 4th Scale command response |
| IW:13 or WX:13 | Shared Data Read Field Value** | 4th Scale floating point |
| IW:14 or WX:14 | Shared Data Read Field Value** | Value |
| IW:15 or WX:15 | Shared Data Read Field Value** | 4th Scale status |
| IW:16 or WX:16 | Shared Data Read Field Value** | Shared Data Access Status |
| IW:17 or WX:17 | Shared Data Read Field Value** | Shared Data Read Field Value** |
| IW:18 or WX:18 | Shared Data Read Field Value** | Shared Data Read Field Value** |
| IW19 or WX:19 | Shared Data Read Field Value** | Shared Data Read Field Value** |
| IW:20 or WX:20 | | Shared Data Read Field Value** |
| ~ | | ~ |
| W:26 or WX:26 | | Shared Data Read Field Value** |

*Can be a second set for first scale if second scale is not used

** The length of shared data value is dependent on the type of shared data field requested.

In no case does it exceed 10 words (20 bytes).

Output Data (from PLC to JAGXTREME Terminal)

| JAGXTREME Terminal Register # | Integer, Division, or Extended Integer | JAGXTREME Terminal Register # | Floating Point |
|---|---|---|---|
| 40009 | 1st Scale (load value) | 40047 | 1st Scale command |
| 40010 | 1st Scale (command) | 40048 | 1st Scale Floating point load value |
| 40011 | 2nd Scale (load value) | 40049 | |
| 40012 | 2nd Scale (command) | 40050 | 2nd Scale command* |
| 40013 | 3rd Scale (load value) | 40051 | 2nd Scale Floating point |
| 40014 | 3rd Scale (command) | 40052 | load value* |
| 40015 | 4th Scale (load value) | 40053 | 3rd Scale command |
| 40016 | 4th Scale (command) | 40054 | 3rd Scale Floating point load value |
| | | 40055 | |
| 40017- 40058 | NOT USED | 40056 | 4th Scale command |
| | | 40057 | 4th Scale Floating point load value |
| | | 40058 | |
| 40059 | Shared Data Command | 40059 | Shared Data Command |
| 40060 | Shared Data Field Name - JAGXTREME terminal name | 40060 | Shared Data Field Name - JAGXTREME terminal name |
| 40061 | Shared Data Field Name – variable name | 40061 | Shared Data Field Name – variable name |
| 40062 | Shared Data Field Name – variable name | 40062 | Shared Data Field Name – variable name |
| 40063 | Shared Data Field Name – variable name | 40063 | Shared Data Field Name – variable name |
| 40064 | Shared Data Write Value** | 40064 | Shared Data Write Value** |
| 40065 | Shared Data Write Value** | 40065 | Shared Data Write Value** |
| 40066 | Shared Data Write Value** | 40066 | Shared Data Write Value** |
| 40067 | Shared Data Write Value** | 40067 | Shared Data Write Value** |
| 40068 | Shared Data Write Value** | 40068 | Shared Data Write Value** |
| 40069 | Shared Data Write Value** | 40069 | Shared Data Write Value** |
| ~ | ~ | ~ | ~ |
| 40073 | Shared Data Write Value** | 40073 | Shared Data Write Value** |

*Can be a second set for first scale if second scale is not used

** The length of shared data value is dependent on the type of shared data field requested. In no case does it exceed 10 registers (20 bytes).

## Integer, Division, and Extended Integer

When one of these formats are selected, each scale will have two 16-bit registers for input data and two 16-bit registers for output data. The PLCs input data will contain one 16-bit register for the scale's weight information and one16-bit register for bit encoded status information. The JAGXTREME terminal will send specific data to the PLC input data based on the data it receives from the PLCs output data. The PLCs output registers consist of one 16-bit integer value which may be used to download a tare or setpoint 1 and one 16-bit register for bit encoded command information.

The following charts provide detailed information on the integer (int), division (div), and the extended integer (ext) data formats. Read data refers to the PLCs input data and write data refers to the PLCs output data.

### DISCRETE READ INTEGER (wgt) or DIVISION (div) – JAGXTREME Terminal Output to PLC Input

| JAGXTREME terminal's holding register # | 17 | 16 | 15 | 14 | 13 | 12 | 11 | 10 | 7 | 6 | 5 | 4 | 3 | 2 | 1 | 0 |
|---|---|---|---|---|---|---|---|---|---|---|---|---|---|---|---|---|
| 40001[1] | X | X | X | X | X | X | X | X | X | X | X | X | X | X | X | X |
| 40002 | Data[2] OK | Update[3] in prog | NET[4] mode | MOT[5] | PAR[6] 1.3 | PAR[6] 1.2 | PAR[6] 1.1 | ESC[7] key | SP8 | SP7 | SP6 | SP5 | SP4 | SP3 | SP2 | SP1 |
| Bit number | 1 | 2 | 3 | 4 | 5 | 6 | 7 | 8 | 9 | 10 | 11 | 12 | 13 | 14 | 15 | 16 |

1- The first register IN is a 16-bit, signed integer that may represent the scale's gross, net, tare, rate, setpoint #1, or displayed weight. Three bits, set by the PLC in the output word, designate what data is sent by the JAGXTREME terminal in this register.

2- Bit 15 is set to a 1 when the scale is operating properly (NOT over capacity, under capacity, in power-up, in expanded mode, or in diagnostic mode). The PLC program should continuously monitor this bit and the PLC processor "rack fault" bit (see PLC documentation) to determine the validity of the discrete and/or shared data.

3- Bit 14 is set to a 1 when the JAGXTREME terminal is in the process of updating its data for the PLC scanner. The PLC should ignore ALL of the data in this case and simply re-scan it.

4- Bit 13 is set to a 1 when the scale is in net mode (a tare has been taken).

5- Bit 12 is set to a 1 when the scale is unstable (or in motion).

6- Bits 9, 10, 11 mirror the state of the first three discrete inputs on the JAGXTREME terminal's controller board (labeled IN1, IN2, and IN3). If the input is ON (input grounded) then the bit is set to a 1.

7- Bit 8 is set to a 1 when the ESC key is pressed on the keypad of the JAGXTREME terminal with the option card. The bit will be cleared to 0 when the display mode bits (see the output table) change from a 0 to any non-zero value.

### DISCRETE READ EXTENDED INTEGER (ext) – JAGXTREME Terminal Output to PLC input

| JAGXTREME terminal's holding register # | 17 | 16 | 15 | 14 | 13 | 12 | 11 | 10 | 7 | 6 | 5 | 4 | 3 | 2 | 1 | 0 |
|---|---|---|---|---|---|---|---|---|---|---|---|---|---|---|---|---|
| 40001[1] | X | X | X | X | X | X | X | X | X | X | X | X | X | X | X | X |
| 40002 | Data[2] OK | Update[3] in prog | NET[4] mode | MOT[5] | PAR[6] 1.3 | PAR[6] 1.2 | PAR[6] 1.1 | ESC[7] key | SP3 | SP2 | SP1 | X[1] sign bit | X[1] wgt bit 20 | X[1] wgt bit 19 | X[1] wgt bit 18 | X[1] wgt bit 17 |
| Bit number | 1 | 2 | 3 | 4 | 5 | 6 | 7 | 8 | 9 | 10 | 11 | 12 | 13 | 14 | 15 | 16 |

1- The scale's gross, net, tare, rate, setpoint #1, or displayed weight is represented by a 21-bit signed integer found in 1ST register and the first 5 bits of 2ND register. Three bits, set by the PLC in the output word, designate what data is sent by the JAGXTREME terminal in these bits. Bit 4 of 2ND register is the sign bit and bit 15 of 1ST register becomes part of the weight value.

2- Bit 15 is set to a 1 when the scale is operating properly (NOT over capacity, under capacity, in power-up, in expanded mode, or in diagnostic mode). The PLC program should continuously monitor this bit and the PLC processor "rack fault" bit (see PLC documentation) to determine the validity of the discrete and/or shared data.

3- Bit 14 is set to a 1 when the JAGXTREME terminal is in the process of updating its data for the PLC scanner. The PLC should ignore ALL of the data in this case and simply re-scan it.

4- Bit 13 is set to a 1 when the scale is in net mode (a tare has been taken).

5- Bit 12 is set to a 1 when the scale is unstable (or in motion).

6- Bits 9, 10, 11 mirror the state of the first three discrete inputs on the JAGXTREME terminal's controller board (labeled IN1, IN2, and IN3). If the input is ON (input grounded) then the bit is set to a 1.

7- Bit 8 is set to a 1 when the ESC key is pressed on the keypad of the JAGXTREME terminal with the option card. The bit will be cleared to 0 when the display mode bits (see the output table) change from a 0 to any non-zero value.

## DISCRETE WRITE INTEGER (wgt), DIVISION (div), or EXTENDED INTEGER (ext) – PLC Output to JAGXTREME Terminal Input

| Bit number | 1 | 2 | 3 | 4 | 5 | 6 | 7 | 8 | 9 | 10 | 11 | 12 | 13 | 14 | 15 | 16 |
|---|---|---|---|---|---|---|---|---|---|---|---|---|---|---|---|---|
| 40009[1] | X | X | X | X | X | X | X | X | X | X | X | X | X | X | X | X |
| 40010 | Load[2] SP-1 | PAR[3] 2.3 | PAR[3] 2.2 | PAR[3] 2.1 | Dislpy mode[4] | Disply mode[4] | Disply mode[4] | Disable setpts[5] | Zero[6] | Print[7] | Tare[8] | Clear[9] | Load Tare[10] | Select 3[11] | Select 2[11] | Select 1[11] |

1- First register is a 16-bit, signed integer value that may represent the scale's tare or setpoint #1 value to be downloaded. Bit 3 or bit 15 are used with this value to instruct the JAGXTREME terminal to load the value into either the tare or setpoint #1.

2- A transition from 0 to 1 loads the value in 1ST register into the setpoint 1 value in the JAGXTREME terminal. It will not "use" this value until bit 8 transitions from 0 to 1.

3- Bit 12, bit 13, and bit 14 can be used to control the state of the first three discrete outputs on the JAGXTREME terminal's controller board. These are labeled OUT1, OUT2, OUT3. Setting the bit to a 1 causes the output to be turned ON.

4- Bit 9, bit 10, and bit 11 determine what data is displayed in the JAGXTREME terminal's lower display area. 0 = normal JAGXTREME terminal display mode, 1 = display content of literal 1, 2 = display content of literal 2, 3 = display content of literal 3, 4 = display content of literal 4, 5 = display content of literal 5, 6 = reserved, 7 = display message from shared data. Pressing ESC also clears the display to the JAGXTREME terminal's normal mode. Display literals may be pre-programmed in the JAGXTREME terminal setup through the Configure Memory program block. Literals may also be sent from the PLC via the shared data variables lit01, lit02, lit03, lit04, and lit05.

5- Set bit 8 to 0 to disable all of the JAGXTREME terminal's setpoint outputs. Set bit 8 to 1 to enable all of the JAGXTREME terminal's setpoint outputs. A transition from 0 to 1 causes the JAGXTREME terminal to accept new setpoint values for use.

6- A transition from 0 to 1 causes a ZERO command.

7- A transition from 0 to 1 causes a PRINT command.

8- A transition from 0 to 1 causes a TARE command.

9- A transition from 0 to 1 causes a CLEAR command.

10- A transition from 0 to 1 loads the value in 1ST register into the preset tare register.

11-A binary value in bit 0, bit 1, and bit 2 select the data that will be sent by the JAGXTREME terminal in Discrete Read weight register. 0 = gross weight, 1 = net weight, 2 = displayed weight, 3 = tare weight, 4 = setpoint 1, 5 = rate. Any value greater than 5 = gross weight.

# Floating Point

## Operational Overview

The JAGXTREME terminal uses integer commands from the PLC to select the floating point weight output data. The terminal will recognize a command when it sees a new value in the scale's command register. If the command has an associated floating point value (for example: loading a setpoint value), it must be loaded into the floating point value registers before the command is issued. Once the terminal recognizes a command, it will acknowledge the command by setting a new value in the command acknowledge bits of the scale's command response register. It will also tell the PLC what floating point value is currently being sent (via the floating point input indicator bits of the command response register). The PLC will wait until it receives the command acknowledgment from the terminal before it sends another command.

Gross weight, net weight, and rate are examples of real-time data. Tare weight, setpoint cutoff, dribble, and tolerance values are examples of static data.

The JAGXTREME terminal has two types of values that it can report to the PLC: real-time and static. When the PLC requests a real-time value, the terminal will acknowledge the command from the PLC once but will send and update the value at every A/D update. However, if the PLC requests a static value, the terminal will acknowledge the command from the PLC once and update the value once. The terminal will continue to send this value until it receives a new command from the PLC.

The JAGXTREME terminal can send a rotation of up to nine different real-time values for each scale. In order to accomplish this, the PLC sends commands to the terminal to add a value to the rotation. Once the rotation is established, the PLC must instruct the terminal to begins its rotation automatically or the PLC may control the pace of rotation by instructing the terminal advance to the next value. If the terminal is asked to automatically alternate its output data, it will switch to the next value in its rotation at the next A/D update. (The A/D update rate depends on the scale type. An analog scale has an update rate of 17 Hz or 58 milliseconds.) The PLC may control the rotation by sending alternate report next field commands (1 and 2).

When the PLC changes to the next command, the terminal switches to the next value in the rotation. The terminal stores the rotation in its shared data so the rotation does not have to be re-initialized after each power cycle. When the PLC does not set up an input rotation, the default input rotation consists of gross weight only.

The following charts provide detailed information on the floating point data format. Read data refers to the PLCs input data and write data refers to the PLCs output data.

## DISCRETE READ FLOATING POINT (flt) – JAGXTREME Terminal Output to PLC Input

| Bit number | 15 | 14 | 13 | 12 | 11 | 10 | 9 | 8 | 7 | 6 | 5 | 4 | 3 | 2 | 1 | 0 |
|---|---|---|---|---|---|---|---|---|---|---|---|---|---|---|---|---|
| 40020 | Cmnd Ack 2[1] | Cmnd Ack 1[1] | Data[2] integrity 1 | FP Input Ind 5[3] | FP Input Ind 4[3] | FP Input Ind 3[3] | FP Input Ind 2[3] | FP Input Ind 1[3] | RESERVED | | | | | | | |
| 40021[4] | X | X | X | X | X | X | X | X | X | X | X | X | X | X | X | X |
| 40022[4] | X | X | X | X | X | X | X | X | X | X | X | X | X | X | X | X |
| 40023 | Data[5] OK | Data[2] integrity 2 | NET[6] mode | MOT[7] | PAR[8] 1.3 | PAR[8] 1.2 | PAR[8] 1.1 | ESC[9] key | JagBAS bit2[10] | JagBAS bit1[10] | Scale[11] Selectd | SP-1 TOL[12] | SP-2 FF[12] | SP-1 FF[12] | SP-2 FEED[12] | SP-1 FEED[12] |

1- The Command Acknowledge bits are used by the JAGXTREME terminal to inform the PLC that it has received a new, valid command. The JAGXTREME terminal rotates sequentially among values 1, 2, 3, 1, 2, 3, 1, 2, … to acknowledge it has processed a new command.

2- The Data Integrity bit in 1ST register (bit 13) is used in conjunction with the bit in 4TH register (bit 14) to insure that the floating point data is valid. For the data to be valid both bits must have the same polarity. These bits will change to the opposite state every A/D (scale) update. If they do not have the same value the data is invalid, the PLC should ignore ALL of the data in this case, and simply re-scan it.

3- The Floating Point Input Indication bits (1ST register, bits 8-12) are used to determine what type of data is being sent in the floating point value (2ND register and 3RD WORD). These bits correspond to a decimal value of 0-31 which represent a particular type of data. See the Floating Point Input Indication Table to determine what type of data.

4- The Bits in the second register and the third register are a single-precision floating point value that may represent the scale's gross, tare, net, rate, setpoint 1, setpoint 2, fine gross, fine tare, fine net, custom JagBASIC, or filter setting data. The PLC command in the respective scale's output register determines what data will be sent.

5- Bit 15 is set to a 1 when the scale is operating properly (NOT over capacity, under capacity, in power-up, in expanded mode, or in diagnostic mode). The PLC program should continuously monitor this bit and the PLC processor "rack fault" bit (see PLC documentation) to determine the validity of the discrete and/or shared data.

6- Bit 13 is set to a 1 when the scale is in net mode (a tare has been taken).

7- Bit 12 is set to a 1 when the scale is unstable (or in motion).

8- Bits 9, 10, 11 mirror the state of the first three discrete inputs on the JAGXTREME terminal's controller board (labeled IN1, IN2, and IN3). If the input is ON (input grounded) then the bit is set to a 1.

9- Bit 8 is set to a 1 when the ESC key is pressed on the keypad of the JAGXTREME terminal with the option card. The bit will be cleared to 0 when the display mode bits (see the output table) change from a 0 to any non-zero value.

10- The JagBASIC custom bits can be used with a custom JagBASIC application to communicate special status to the PLC. The JagBASIC and PLC code define the meaning of these bits.

11- The Scale Selected bit allows the PLC to determine which scale is currently displayed on the upper weight display (for two scale systems). When the bit is set to 1, the scale associated with this data is selected.

12- These setpoint bits are used to report the status of the setpoint feed, fast feed, and tolerance conditions.

Floating Point Input Indication Table

| Dec | Data | Dec | Data | Dec | Data |
|---|---|---|---|---|---|
| 0 | Gross Weight [1] | 8 | JagBASIC custom #2 [1] | 16 | Setpoint 2 dribble |
| 1 | Net Weight [1] | 9 | JagBASIC custom #3 | 17 | Setpoint 1 tolerance |
| 2 | Tare Weight [1] | 10 | JagBASIC custom #4 | 18 | primary units, low increment size |
| 3 | Fine Gross Weight [1] | 11 | Low-pass filter frequency | 19 - 28 | reserved |
| 4 | Fine Net Weight [1] | 12 | Notch filter frequency | 29 | last JAGXTREME terminal error code |
| 5 | Fine Tare Weight [1] | 13 | Setpoint 1 cutoff | 30 | No data response command successful |
| 6 | Rate [1] | 14 | Setpoint 2 cutoff | 31 | No data response command failed |
| 7 | JagBASIC custom #1 [1] | | | | |

1-These are real-time fields that the PLC may request either through an input rotation or a report command. All other fields may only be requested through a report command.

**DISCRETE WRITE FLOATING POINT (flt) – PLC Output to JAGXTREME Terminal Input**

| JAGXTREME terminal's holding register # | 17 | 16 | 15 | 14 | 13 | 12 | 11 | 10 | 7 | 6 | 5 | 4 | 3 | 2 | 1 | 0 |
|---|---|---|---|---|---|---|---|---|---|---|---|---|---|---|---|---|
| 40047 | Scale command[1] | | | | | | | | | | | | | | | |
| 40048[2] | X | X | X | X | X | X | X | X | X | X | X | X | X | X | X | X |
| 40049[2] | X | X | X | X | X | X | X | X | X | X | X | X | X | X | X | X |
| Bit number | 1 | 2 | 3 | 4 | 5 | 6 | 7 | 8 | 9 | 10 | 11 | 12 | 13 | 14 | 15 | 16 |

1- The command register is used to instruct the JAGXTREME terminal what data to send in the discrete read data, to load the floating point data in the write command, and to control the JAGXTREME terminal's discrete outputs or lower display. See the PLC Output Command Table for a list of the available commands and their respective decimal or hex value. Not all commands will require a value in the floating point load value words.

2- The bits in 2nd register and 3rd register are a single-precision floating point value. This value is used with the command in 1st register to instruct the JAGXTREME terminal to download the floating point value into the field specified in the command.

## PLC Output Command Table (Floating point only)

| Dec | (Hex) | Command |
|---|---|---|
| 0 | 00 | Report next rotation field @ next A/D update [1] |
| 1 | 01 | Report next rotation field [1,2] |
| 2 | 02 | Report next rotation field [1,2] |
| 3 | 03 | Reset rotation |
| 10 | 0a | Report gross weight [1,3] |
| 11 | 0b | Report net weight [1,3] |
| 12 | 0c | Report tare weight [1,3] |
| 13 | 0d | Report fine gross weight [1,3] |
| 14 | 0e | Report fine net weight [1,3] |
| 15 | 0f | Report tare weight [1,3] |
| 16 | 10 | Report rate [1,3] |
| 17 | 11 | Report JagBASIC value #1 [1,3,7] |
| 18 | 12 | Report JagBASIC value #2 [1,3,8] |
| 19 | 13 | Report low-pass filter frequency [3] |
| 20 | 14 | Report notch filter frequency [3] |
| 21 | 15 | Report setpoint 1 cutoff [3,4] |
| 22 | 16 | Report setpoint 2 cutoff [3,4] |
| 23 | 17 | Report setpoint 1 dribble [3,4] |
| 24 | 18 | Report setpoint 2 dribble [3,4] |
| 25 | 19 | Report setpoint tolerance [3,4] |
| 27 | 1b | Report JagBASIC value #3 [3,9] |
| 28 | 1c | Report JagBASIC value #4 [3, 10] |
| 29 | 1d | Report error [3] |
| 30 | 1e | Report primary units [3] |
| 40 | 28 | Add gross weight to rotation |
| 41 | 29 | Add net weight to rotation |
| 42 | 2a | Add tare weight to rotation |

| Dec | (Hex) | Command |
|---|---|---|
| 75 | 4b | Reset ESC key |
| 78 | 4e | Disable error display |
| 79 | 4f | Enable error display |
| 80 | 50 | Set normal display mode |
| 81 | 51 | Display Literal 1 |
| 82 | 52 | Display Literal 2 |
| 83 | 53 | Display Literal 3 |
| 84 | 54 | Display Literal 4 |
| 85 | 55 | Display Literal 5 |
| 87 | 57 | Display shared data message |
| 88 | 58 | Disable weight display |
| 89 | 59 | Enable weight display |
| 90 | 5a | Set discrete OUT1 on |
| 91 | 5b | Set discrete OUT2 on |
| 92 | 5c | Set discrete OUT3 on |
| 93 | 5d | Set discrete OUT4 on |
| 100 | 64 | Set discrete OUT1 off |
| 101 | 65 | Set discrete OUT2 off |
| 102 | 66 | Set discrete OUT3 off |
| 103 | 67 | Set discrete OUT4 off |
| 110 | 6e | Set setpoint 1 cutoff value [4,5] |
| 111 | 6f | Set setpoint 1 dribble value [4,5] |
| 112 | 70 | Set setpoint 1 tolerance value [4,5] |
| 114 | 72 | Enable setpoint 1 [4] |
| 115 | 75 | Disable setpoint 1 [4] |
| 116 | 76 | Setpoint 1 use gross weight [4] |
| 117 | 77 | Setpoint 1 use net weight [4] |

| Dec | (Hex) | Command |
|---|---|---|
| 153 | 99 | Set JagBASIC Output 4 value [6, 14] |
| 160 | a0 | Apply scale setup |
| 161 | a1 | Write scale calibration to EEPROM |
| 162 | a2 | Disable JAGXTREME terminal tare |
| 163 | a3 | Enable JAGXTREME terminal tare |

NOTES:

1 – A command that requests real-time fields from the JAGXTREME terminal. The JAGXTREME terminal updates this input data to the PLC at the A/D update rate of the scale

2 – A command used by the PLC to select the next field from the input rotation. The PLC must alternate between these two commands to tell the JAGXTREME terminal when to switch to the next field of the input rotation.

3 – A command requiring the JAGXTREME terminal to report a specific value in the PLC input message. As long as one of these commands is sent in the Scale Command, the JAGXTREME terminal will respond with the requested data and not data from an input rotation.

4 – The setpoint numbers are relative to each particular scale in the JAGXTREME terminal. Scale A uses setpoints 1 and 2. Scale B uses setpoints 3 and 4.

5 – A command that requires a floating point value output from the PLC to the JAGXTREME terminal. The JAGXTREME terminal reflects back this value in the floating point data of the input message to the PLC.

6 – A command used between the PLC and a JagBASIC application. This data has a four-byte length and is defined by the application.

| | | | | | |
|---|---|---|---|---|---|
| 43 | 2b | Add fine gross weight to rotation | 118 | 78 | Setpoint 1 use rate [4] |
| 44 | 2c | Add fine net weight to rotation | 119 | 77 | Setpoint 1 fill [4] |
| 45 | 2d | Add fine tare weight to rotation | 120 | 78 | Setpoint 1 discharge [4] |
| 46 | 2e | Add rate to rotation | 121 | 79 | Enable setpoint 1 latching [4] |
| 47 | 2f | Add JagBASIC value #1 to rotation | 122 | 7a | Disable setpoint 1 latching [4] |
| 48 | 30 | Add JagBASIC value #2 to rotation | 123 | 7b | Reset setpoint 1 latch [4] |
| 60 | 3c | Load programmable tare value [5] | 130 | 82 | Set setpoint 2 cutoff value [4,5] |
| 61 | 3d | Pushbutton tare command | 131 | 83 | Set setpoint 2 dribble value [4,5] |
| 62 | 3e | Clear command | 134 | 86 | Enable setpoint 2 [4] |
| 63 | 3f | Print command | 135 | 87 | Disable setpoint 2 [4] |
| 64 | 40 | Zero command | 136 | 88 | Setpoint 2 use gross weight [4] |
| 65 | 41 | Select scale A | 137 | 89 | Setpoint 2 use net weight [4] |
| 66 | 42 | Select scale B | 138 | 8a | Setpoint 2 use rate [4] |
| 67 | 43 | Select other scale | 139 | 8b | Setpoint 2 fill [4] |
| 68 | 44 | Custom print 1 command | 140 | 8c | Setpoint 2 discharge [4] |
| 69 | 45 | Custom print 2 command | 141 | 8d | Enable setpoint 2 latching [4] |
| 70 | 46 | Custom print 3 command | 142 | 8e | Disable setpoint 2 latching [4] |
| 71 | 47 | Custom print 4 command | 143 | 8f | Reset setpoint 2 latch [4] |
| 72 | 48 | Custom print 5 command | 150 | 96 | Set JagBASIC Output 1 value [6, 11] |
| 73 | 49 | Set low-pass filter frequency [5] | 151 | 97 | Set JagBASIC Output 2 value [6, 12] |
| 74 | 4a | Set notch filter frequency [5] | 152 | 98 | Set JagBASIC Output 3 value [6, 13] |

## Floating Point Command Examples

Data requirement: only net weight sent (continuously) for scale 1

| Step # | Scale command (from PLC) | Scale Floating Point Value | Command response from JAGXTREME terminal | Floating Point Value |
|---|---|---|---|---|
| 1 (PLC sends command to JAGXTREME terminal to report net weight) | 11 (dec) loaded into command register 40047 | none required | | |
| 2 (JAGXTREME terminal sees new command) | | | Command ack. =1 F.P. ind. = 1 (net) | Net weight in floating point |
| As long as the PLC leaves the 11 (dec) in the command register the JAGXTREME terminal will update the net value every A/D cycle. | | | | |

**Data requirement: load setpoint 1 cutoff value = 21.75 for scale 1**

| Step # | Scale command (from PLC) | Scale Floating Point Value | Command response from JAGXTREME terminal | Floating Point Value |
|---|---|---|---|---|
| 1 (PLC loads floating point value first) | | floating point value = 21.75 | | |
| 2 (PLC sends command to set setpoint 1 cutoff value) | 110 (dec) loaded into command register 40047 | floating point value = 21.75 | | |
| 3 (JAGXTREME terminal sees new command, loads the value into the setpoint and ends a return message to indicate the new setpoint value) | | | Command ack. = 1 F.P. ind = 13 | Floating point value = 21.75 |
| 4 (PLC instructs JAGXTREME terminal to start "using" new setpoint value) | 114 (dec) loaded into command register 40047 | | | |
| 5 (JAGXTREME terminal sees new command) | | | Command ack. = 2 F.P. ind = 30 | (null value) |
| The PLC should always wait to receive a command acknowledgment before sending the next command to the JAGXTREME terminal. After the PLC finishes loading its setpoint value, it could then resume monitoring the weight information it requires by sending a command to report some type of weight or set up a rotation of reported data. | | | | |

Data requirement: rotation of gross weight and rate updated on A/D

| Step # | Scale command (from PLC) | Scale Floating Point Value | Command response from JAGXTREME terminal | Floating Point Value |
|---|---|---|---|---|
| 1<br>(PLC clears out any previous rotation with reset) | 3 (dec) loaded into command register 40047 | | | |
| 2<br>(JAGXTREME terminal sees new command) | | | Command ack.= 1<br>F.P. ind = 30 | |
| 3<br>(PLC adds gross weight to rotation) | 40 (dec) loaded into command register 40047 | (null value) | | |
| 4<br>(JAGXTREME terminal sees new command) | | | Command ack. = 2<br>F.P. ind = 30 | |
| 5<br>(PLC adds rate to the rotation) | 46 (dec) loaded into command register 40047 | | | |
| 6<br>(JAGXTREME terminal sees new command) | | | Command ack. = 3<br>F.P. ind = 30 | (null value) |
| At this point, the rotation has been set up. Now the PLC needs to command the JAGXTREME terminal to begin the rotation. | | | | |
| 7<br>(PLC sends the command to begin the rotation at A/D) | 0 (dec) loaded into command register 40047 | | | |
| 8<br>(JAGXTREME terminal sends gross weight at A/D update ~ 58 msec) | | | Command ack. = 0<br>F.P. ind = 0 | Floating point value = gross wt. |
| 9<br>(PLC leaves 0 in its command register and the JAGXTREME terminal sends the rate value at the next A/D) | 0 (dec) loaded into command register 40047 | | Command ack. = 0<br>F.P. ind = 6 | Floating point value = rate |
| 10<br>(PLC leaves 0 in its command register and the JAGXTREME terminal sends the gross value at the next A/D) | 0 (dec) loaded into command register 40047 | | Command ack. = 0<br>F.P. ind = 0 | Floating point value = gross wt. |
| 11<br>(PLC leaves 0 in its command register and the JAGXTREME terminal sends the rate value at the next A/D) | 0 (dec) loaded into command register 40047 | | Command ack. = 0<br>F.P. ind = 6 | Floating point value = rate |
| This rotation continues until the PLC sends a different command. At approximately every 58 msec the JAGXTREME terminal updates its data with the next field in its rotation. The PLC must check the floating point indication bits to determine which data is in the floating point value. | | | | |

Data requirement: rotation of net weight and rate updated on PLC command

| Step # | Scale command (from PLC) | Scale Floating Point Value | Command response from terminal | Floating Point Value |
|---|---|---|---|---|
| 1 (PLC clears out any previous rotation with reset) | 3 (dec) loaded into command register 40047 | | | |
| 2 (JAGXTREME terminal sees new command) | | | Command ack.= 1 F.P. ind = 30 | |
| 3 (PLC adds net weight to rotation) | 41 (dec) loaded into command register 40047 | (null value) | | |
| 4 (JAGXTREME terminal sees new command) | | | Command ack. = 2 F.P. ind = 30 | |
| 5 (PLC adds rate to the rotation) | 46 (dec) loaded into command register 40047 | | | |
| 6 (JAGXTREME terminal sees new command) | | | Command ack. = 3 F.P. ind = 30 | (null value) |
| At this point, the rotation has been set up. Now the PLC needs send commands to the JAGXTREME terminal to begin the rotation and advance to the next value when required. | | | | |
| 7 (PLC sends the command to report the first field in the rotation.) | 1 (dec) loaded into command register 40047 | | | |
| 8 (JAGXTREME terminal acknowledges the command and sends net weight at every A/D update until the PLC gives the command to report the next rotation field.) | | | Command ack. = 1 F.P. ind = 1 | Floating point value = net wt. |
| 9 (PLC sends the command to report the next field.) Note: if the PLC leaves the 1 (dec) in the command, the JAGXTREME terminal does NOT see this as another command to report the next rotation field. | 2 (dec) loaded into command register 40047 | | | |
| 10 (JAGXTREME terminal acknowledges the command and sends rate at every A/D update until the PLC gives the command to report the next rotation field.) | | | Command ack. = 2 F.P. ind = 6 | Floating point value = rate |

| | | | | |
|---|---|---|---|---|
| 11<br>(PLC sends the command to report the next field in the rotation.) | 1 (dec) loaded into command register 40047 | | | |
| 12<br>(JAGXTREME terminal acknowledges the command and sends net weight at every A/D update until the PLC gives the command to report the next rotation field.) | | | Command ack. = 1<br>F.P. ind = 1 | Floating point value = net wt. |
| 13<br>(PLC sends the command to report the next field.) | 2 (dec) loaded into command register 40047 | | | |
| 14<br>(JAGXTREME terminal acknowledges the command and sends rate at every A/D update until the PLC gives the command to report the next rotation field.) | | | Command ack. = 2<br>F.P. ind = 6 | Floating point value = rate |
| At approximately every 58 msec the JAGXTREME terminal updates its data with new data, but it does not advance to the next field in the rotation until the PLC sends it the command to report the next field. The PLC should check the floating point indication bits to determine which data is in the floating point value. | | | | |

# Shared Data

## Operational Overview

Modbus Plus PLCs can access the JAGXTREME terminal's Shared Data. Since the Modbus Plus communications supports larger size messages, there is not a need for two separate modes of communication. Modbus Plus PLCs can read JAGXTREME terminal Shared Data variables, write new values to JAGXTREME terminal Shared Data variables, and write operator messages on the terminal's lower display. For Modbus Plus, the PLC output data had additional fields for accessing Shared Data. The PLC must specify the Shared Data command and variable name in the PLC output message. If the command is a write command, then the PLC output message must also contain the write field value. The maximum length of this value is 20 bytes. When the Shared Data command is a read command, the PLC input message will have a read field containing the data from the Shared Data variable specified in the output message. The maximum length of the data reported in the read field is 20 bytes. The Shared Data variables are self-typing. The terminal determines the type of any valid data field in the message from the variable's name and definition in Shared Data. The terminal will not allow string data to be written in a floating point variable or visa versa.

## Shared Data Input

The input information for the shared data consists of two sections: the shared data status and the shared data read field value (if requested by the shared data output command). The shared data status information is a register that contains an integer value. This integer value represents one of the following status values:

0 Null status

1 Command completed successfully

2 Invalid shared data name

3 Invalid shared data command

Note: Refer to the Shared Data Reference Guide for a complete listing of Shared Data Fields.

4 Cannot write because field is write-protected (legal for trade)

5 Cannot access remote JAGXTREME terminal

The shared data read field value contains the value of the shared data variable specified in the shared data output (from the PLC to the terminal). It is only present when the command from the shared data output requests read shared data. This value is self-typing; for example, it could be a floating point number or a string variable. The length is determined by the variable selected but will exceed 20 bytes. See the tables following the Shared Data Output section for a list of possible variables and their contents.

## Shared Data Output

The output information for the shared data consists of four sections: the shared data command, the shared data name, the shared data variable name, and the shared data write value (if required by the shared data output command). The shared data command information is a register that contains an integer value. This integer value represents one of the following status values:

0 Null command

1 Read shared data

2 Write shared data

3 Write to JAGXTREME lower display

The JAGXTREME terminal processes a shared data command "on demand" by the PLC. When a new value is placed in the shared data command register, the terminal will perform the command issued. The terminal does not provide "real time" information to the PLC; it supplies a "snapshot' of the data not an automatic update of new values of the same shared data command. Instead, the PLC must request the information again by setting a new value in the shared data command register. To do successive reads, for example, the PLC must alternate between a "null" command and a "read" command in the shared data command register. For the most efficient processing, the PLC should set up the terminal name, the variable name, and the write value (if any) while it is setting the "null" command. Once that is completed, the PLC can then set the shared data command to "read" or "write".

Before sending a command to write to the terminal's lower display, the PLC must issue a display mode command in the scale command registers (command 57 for floating point data; 2nd output register bits 9-11 = on for other data formats) to enable the terminal to accept commands for its display.

## Floating Point and String Data Field Codes

The following charts describe the floating point and string data fields that the JAGXTREME terminal can access. String data fields are serial ASCII character strings. Each table contains the following information:

**Field Code** is the ASCII field that must be loaded into the PLC write buffer. It identifies the data that is written to the JAGXTREME terminal or returned by the terminal to the PLC read buffer. The field code is left justified and must be expanded to six bytes by adding a trailing space. If the field code contains an "n", it should be replaced by the scale number (1 or 2 for scale A or B) or the setpoint number (1-8).

**Description** is a description of the field.

**Read/Write** indicates whether the PLC can read and/or write to the field.

**Length** is the number of bytes (length) of the field. All floating point values are 4 bytes (2 words) long. Strings are the length specified.

| Floating Point Data Fields | | | |
|---|---|---|---|
| Field Code | Description | Read/ Write | Length |
| wtn10 | Gross Weight | R | 4 |
| wtn11 | Net Weight | R | 4 |
| wtn12 | Auxiliary Gross Weight | R | 4 |
| wtn13 | Auxiliary Net Weight | R | 4 |
| wsn04 | Tare Weight | R | 4 |
| wsn05 | Auxiliary Tare Weight | R | 4 |
| spn05 | Setpoint Coincidence Value | R/W | 4 |

Replace "n" with appropriate scale number. Example: wt110 or wt210.

| String Data Fields | | | |
|---|---|---|---|
| Field Code | Description | Read/ Write | Length |
| wtn01 | Gross Weight | R | 12 |
| wtn02 | Net Weight | R | 12 |
| wtn03 | Weight Units | R | 2 |
| wtn04 | Auxiliary Gross Weight | R | 12 |
| wtn05 | Auxiliary Net Weight | R | 12 |
| wtn06 | Auxiliary Weight Units | R | 2 |
| s_200 | Scale Motion A (0 or 1 binary) | R | 1B[1] |
| s_201 | Center of Zero A (0 or 1 binary) | R | 1B[1] |
| s_202 | Over Capacity A (0 or 1 binary) | R | 1B[1] |
| s_203 | Under Zero A (0 or 1 binary) | R | 1B[1] |
| s_204 | Net Mode A | R | 1B[1] |
| s_207 | Scale A Selected | R | 1B[1] |
| s_208 | Scale Motion B | R | 1B[1] |
| s_209 | Center of Zero B | R | 1B[1] |
| s_20a | Over Capacity B | R | 1B[1] |
| s_20b | Under Zero B | R | 1B[1] |
| s_20c | Net Mode B | R | 1B[1] |
| s_20f | Scale B Selected | R | 1B[1] |
| wsn01 | Scale Mode (Gross or Net) | R | 1 |
| wsn02 | Tare Weight | R | 12 |
| wsn03 | Auxiliary Tare Weight | R | 12 |
| wsn06 | Current Units (1=primary, 2=secondary) | R | 1I[3] |
| wsn07 | Tare Source (1=PB, 2=KB, 3=auto) | R | 1I[3] |

Replace "n" with appropriate scale number. Example: wt101 or wt201.

| String Data Fields | | | |
|---|---|---|---|
| Field Code | Description | Read/Write | Length |
| csn01 | Auxiliary Display Units (1=lb, 2=kg, 3=g, 4=oz, 5=lb/oz, 6=troy oz, 7=pennyweight, 8=metric tons, 9=tons, 10=custom) | R | 1I[3] |
| csn02 | Custom Units Name | R/W | 6 |
| csn18 | Scale ID | R/W | 8 |
| spn01 | Setpoint Name | R/W | 8 |
| spn02 | Setpoint Assignment (0=none, 1=scale A, 2=scale B) | R | 1I[3] |
| jag07 | Julian Date | R | 8 |
| jag08 | Julian Time | R | 8 |
| jag09 | Consecutive Number | R/W | 2 |
| jag11 | Software ID | R | 12 |
| jag20 | Time | R | 11 |
| jag21 | Weekday | R | 10 |
| lit01[2] | User Literal 1 | R/W | 40 |
| lit20 | User Literal 20 | R/W | 40 |
| Pmt01[2] | User Prompt 1 | R/W | 40 |
| Pmt20 | User Prompt 20 | R/W | 40 |
| var01[2] | User Variable 1 | R/W | 40 |
| var20 | User Variable 20 | R/W | 40 |

1 Fields identified as 1B are returned as a binary 0 or 1 designating false or true.

2 There are 20 each user literals, prompts and variables numbered 01-20.

3 Fields identified as 1I are returned as integer values as described.

Replace "n" with appropriate scale number. Example: cs118 or cs218.

## Global Data

The JAGXTREME terminal supports Modbus Plus Global Data as an option. The terminal writes to Global Data, but never reads Global Data. Global Data from one Modbus Plus node is continuously available to all other nodes on the network. Use of Global Data can make programming the PLC simpler since, with this option, the PLC need not continuously issue commands to read the terminal registers. The PLC must still issue MSTR commands to send commands to the terminal.

The user selects the Global Data option in the setup menus. When the user selects the integer data format, the terminal duplicates the integer "terminal-to-PLC" data transfer registers into the global data. When the user selects the floating point data format, the terminal duplicates the floating point "terminal-to-PLC" data transfer registers into the global data.

## Controlling the Discrete I/O Using a PLC Interface

The JAGXTREME terminal provides the ability to directly control its discrete outputs and read its discrete inputs via the (digital) PLC interface options. System integrators should be aware that the terminal discrete I/O updates are synchronized with the A/D rate and not with the PLC I/O scan rate. This may cause a noticeable delay in reading inputs or updating outputs as observed from the PLC to real world signals.

# Hardware Setup

## Wiring

The Modbus Plus Option has two possible connections: a D9 connector or a 4-position removable terminal strip to connect to the Modbus Plus network interface. Most installations will use the D9 connector. The terminal strip should only be used in applications where the adapter harness (PN 0900-0320-000), which provides an external D9 connection for general purpose and harsh environment models, is required. Cable distance, type, and termination are specified by Modbus Plus.

Female DE-9

| | |
|---|---|
| 1 | Shield (to Modicon D9 conn. terminal 2) |
| 2 | White (to Modicon D9 conn. terminal 1) |
| 3 | Black (to Modicon D9 conn. terminal 3) |
| 4 | N.C. |
| 5 | N.C. |
| 6 | N.C. |
| 7 | N.C. |
| 8 | N.C. |
| 9 | N.C. |

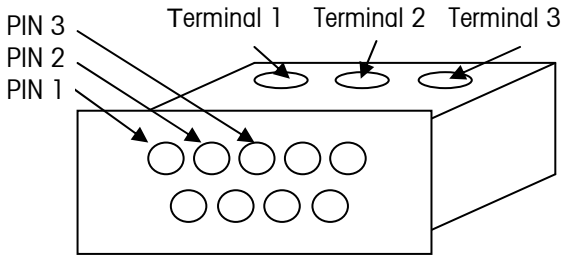


Modbus Plus Connector

Adapter Harness Wiring

| Terminal Number | Color | DE-9 pin # |
|---|---|---|
| 1 | Green | 1 |
| 2 | White | 2 |
| 3 | Black | 3 |

JAGXTREME Terminal Modbus Plus Option PCB.

The Modbus Plus Option card has no jumpers.

## Switch Setup

Each mode on the Modbus Plus network must have a unique address. The Modbus Plus node address is set with the "dip switches" on the Modbus Plus interface card. The node address value of the card is equal to the value of the switches plus 1. The node address can be a value of 1 to 64.

| Switch pos. | 1 | 2 | 3 | 4 | 5 | 6 |
|---|---|---|---|---|---|---|
| Value | 1 | 2 | 4 | 8 | 16 | 32 |

With the switch in the OFF position, the value is shown above. With the swtich in the ON positon, the value is zero for that switch.

Example:

| | |
|---|---|
| SW1=OFF | Switch Value = 1 |
| SW2=ON | 0 |
| SW3=ON | 0 |
| SW4=OFF | 8 |
| SW5=OFF | 16 |
| SW6=ON | +1 |
| NODE ADDRESS = 26 | |

## Software Setup

The JAGXTREME terminal automatically detects the presence of a Modbus Plus option card, if one is installed, and adds the setup parameters to the options block. Enter setup. Advance to the **CONFIGURE OPTIONS** sub-block to configure the terminal for Modbus Plus.

## Scale Setup Sub-block

Local refers to a scale in the same terminal as the Modbus Plus option card. Remote refers to a scale interfaced across Ethernet when using a JAGXTREME terminal.

Note: With all of the switches in the OFF position, the node address will be equal to 1.

The divisions display option is useful for heavy capacity scales that exceed the ± 32767 range of a signed integer in displayed

The Scale Setup sub-block lets you specify how the Modbus Plus interface is used. Several options are available to correspond with your system setup.

To configure the block:

- Press **ENTER** at the **Modbus** prompt to access the program block.
- Press **ENTER** at the **Scale Setup** prompt. At the **Data Format?** prompt, press **SELECT** to choose the desired weight display option:
- **Wgt**—displays scale weight in selected weight unit (lb, kg, or g).
- **Div**—displays scale weight in display divisions. The PLC multiplies the display divisions by the increment size to calculate the weight in display units.
- **Ext**—displays scale weight in the extended 21 signed bit format.
- **Flt**---displays weight in floating point data format
- Refer to the Discrete Read and Discrete Write tables in this manual for additional information on mapping of discrete read data to the PLC.
- At the **Nbr of Scales?** prompt, press **SELECT** to display the number of scales to be interfaced (1, 2, 3, or 4).
- If 2 or More Scales
- At the **Scale N?** prompt, press **SELECT** to indicate if the designated scale is local or remote.
- For remote scales, select the terminal number (Ethernet node location) at the **Node?** prompt.
- At the **Internal Scale?** prompt, identify each scale as A or B.
- Press **ENTER** to continue to the next sub-block or press **ESCAPE** to exit the setup mode.
- **At the Globals? Y/N** prompt, select **Y(es)** if network global PLC read data is required. Otherwise, select **N(o)**. Press **ENTER** to accept the selection and continue.

## Node Communications

This manual does not attempt to give all information and configuration parameters for a Modbus Plus network. Please refer to the PLC documentation for more information on specific network performance.

This sub-block lets you enter the Allen-Bradley RIO network communication parameters. The JAGXTREME terminal programs the Node Adapter Chip with these parameters.

- Press **ENTER** at the **Node Communicate** prompt to configure communications parameters.
- The JAGXTREME terminal will display Rack Address XXX, where XXX represents the node selected by the setup switches on the Modbus Plus option card. The node cannot be changed from the JAGXTREME terminal software setup. The setup switches must be changed to select a different node address.

## Reset to Factory Sub-block

Reset to Factory returns all parameters for this block to their original settings. You cannot reset a single value or specify only a few of the sub-block values.

If desired, you can reset the parameters for this program block to the default values.

To reset the program block parameters:

- Press **ENTER** at the **Reset to Factory** prompt.
- At the **Are You Sure?** prompt, press **SELECT** to highlight **Y(es)** to confirm and reset the values to factory defaults, or select **N(o)** if you do not wish to reset the values.
- Press **ESCAPE** to exit the sub-block.
- Press **SELECT** to continue to another program block if desired.

# Troubleshooting

### Modbus Plus Option PCB Status Lights

There is a green diagnostic LED on the JAGXTREME terminal Modbus Plus option card, which is viewable through a small hole in the interface mounting bracket at the rear of the terminal. The repetitive flashing patterns have the following meanings.

**Flash every 160 milliseconds**. The terminal node is working normally in that it is successfully receiving and passing the token. Every node on the link should be flashing this same pattern.

**Flash every one second**. The terminal node is in an off-line state where it must monitor the link for five seconds. During this period, it hears all active nodes on the network and is building the active station table.

**Two flashes, off for two seconds**. The terminal node is permanently in an idle, never-getting-token state. It is hearing the other nodes but is never getting the token itself. This JAGXTREME terminal node may have a bad transmitter.

**Three flashes, off for 1.7 seconds**. This terminal node is not hearing any other nodes so it is periodically claiming and winning the token, and then finding no other node to send it to. It could be that this is the only node on the link, or that there are other nodes and this has node a bad receiver or bad network connection. The latter situation could be disruptive to the entire network.

**Four flashes, off for 1.4 seconds.** This terminal node has heard a valid packet that was a duplicate-node-address sent from another node on the network. The node is now in an off-line state where it will remain passively monitoring the link, until it has not heard the duplicate node for 5 seconds.

# Modbus Plus PCB Parts

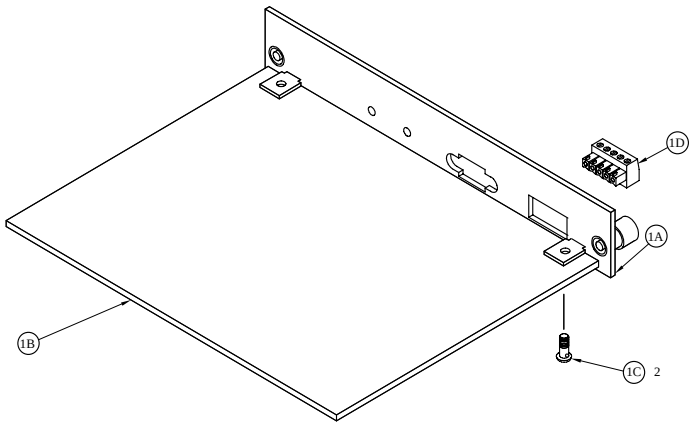


| Ref # | Part Number | Description | Quantity |
|---|---|---|---|
| 1A | (*)14547800A | I/O Plate | 1 |
| 1B | (*)15084900A | PCB, Modbus Plus (w/o hardware) | 1 |
| 1C | R0511100A | Screw, M4 x 10 Taptite | 2 |
| 1D | (*)14374900A | Connector, 5-Position Terminal Block | 0** |
| * | (*)14547700A | Modbus Plus PCB Panel Assembly | 1 |

*Includes all parts listed above as an assembly.

**Included with Modbus Plus Pigtail Adapter 0900-0320.

(*) May include revision level prefix

# Modicon 984-385E Setup Example

Refer to the Modicon Modbus Plus Network Planning and Installation Guide for information on network cabling, terminating connectors, and in-line connectors needed to build a network cable.

A Modbus Plus network cable connects the JAGXTREME terminal Modbus Plus Interface to the Modbus Plus port on the 984-385E Programmable Controller Module. Set the node address for the 984-385E PLC using the DIP switches on the bottom of the Programmable Controller Module.

The Modbus Plus indicator on the 984-385E front panel indicates a good connection to the terminal when it is constantly flashing green. There is also a green diagnostic LED on the Modbus Plus Option card. The terminal has made a good network connection when it constantly flashes the green LED every 160 milliseconds.

Modsoft programming software running on a PC controls the Modicon 984-385E PLC. A serial cable connects a serial port on the PC to the Modbus port on the PLC. The Modsoft Programmer User Manual describes how to use Modsoft. Use 2.32 or a later version of the Modsoft software. Perform the following steps from Modsoft to read and write to a terminal on the Modbus Plus network from a Modicon 984-385 PLC:

- With Modsoft running on a PC, go to the Configuration Overview screen and select the 984-385E PLC.
- Switch to the Configuration Overview - Ports menu, and change the Modbus port to Bridge mode. This allows commands issued from Modsoft to be transferred to the Modbus Plus network.
- From the Modsoft main menu, go "on-line" to the 984-385E PLC from Modsoft.
- Once a successful connection has been made, use the MSTR instruction to access the terminal. The Modicon Ladder Logic Block Library User Guide gives detailed information about the MSTR instruction.

## MSTR Instruction Example to Read Integer Registers

This example shows using the MSTR instruction to read the integer status and weight registers in the terminal. In this example, the terminal is at node 2 in the dip switches on the Modbus Plus interface card. The user must configure the terminal to run in integer mode using the <Config Options><Modbus Plus><Scale Setup><Data Format?> menus. This MSTR reads the holding registers for four scales in integer mode.

Control Block

| PLC Register | Content | |
|---|---|---|
| 41001 | 0002 Dec | Read command |
| 41002 | xxxx Hex | Error status |
| 41003 | 0008 Dec | Number of registers to be read |
| 41004 | 0001 Dec | Starting address of integer weight/status registers in the JAGXTREME terminal. (1 = 40001). |
| 41005 | 0002 Hex | Routing path. JAGXTREME terminal address = node 2. |
| 41006 | 0001 Dec | Data slave routing path. |
| 41007 | 0000 Dec | Additional routing register |
| 41008 | 0000 Dec | Additional routing register |
| 41009 | 0000 Dec | Additional routing register |

Data Area

| PLC Register | |
|---|---|
| 41100 | The PLC stores registers read from the JAGXTREME terminal registers 40001-40007 starting here. |

Length

| | |
|---|---|
| 0008 | This integer value defines the length of the Data Area. |

## MSTR Instruction Example to Write Integer Registers

This example shows using the MSTR instruction to write the integer command registers in the terminal. In this example, the terminal address is set to node 2. The user must configure the terminal to run in integer mode using the <Config Options><Modbus Plus><Scale Setup><Data Format?> menus. This MSTR writes the holding registers for four scales in integer mode.

Control Block

| PLC Register | Content | |
|---|---|---|
| 41201 | 0001 Dec | Write command |
| 41202 | xxxx Hex | Error status |
| 41203 | 0008 Dec | Number of registers to be read |
| 41204 | 0009 Dec | Starting address of integer command registers in registers in the terminal. (9 = 40009) |
| 41205 | 0002 Hex | Routing path. JAGXTREME terminal address=node 2. |
| 41206 | 0001 Dec | Data slave routing path. |
| 41207 | 0000 Dec | Additional routing register |
| 41208 | 0000 Dec | Additional routing register |
| 41209 | 0000 Dec | Additional routing register |

Data Area

| PLC Register | |
|---|---|
| 41250 | MSTR writes data from the PLC registers starting at this address to JAGXTREME terminal registers 40009 to 40016. |

Length

| | |
|---|---|
| 0008 | This value defines the length of the Data Area. |

## MSTR Instruction Example to Read Terminal Floating Point Registers

This example shows how to use the MSTR instruction to read the floating point registers in the terminal. In this example, the terminal is at node 3. The user must configure the terminal to run in floating point mode using the <Config Options><Modbus Plus><Scale Setup><Data Format?> menus. This MSTR command reads the floating point status and weight registers for scale 1 and scale 2.

Control Block

| PLC Register | Content | |
|---|---|---|
| 41001 | 0002 Dec | Read command |
| 41002 | xxxx Hex | Error status |
| 41003 | 0006 Dec | Number of registers to be read |
| 41004 | 0020 Dec | Starting register for JAGXTREME terminal status and floating point weight registers. (20 = 40020). |
| 41005 | 0003 Hex | Routing path. JAGXTREME terminal address=node 3 |
| 41006 | 0001 Dec | Data slave routing path. |
| 41007 | 0000 Dec | Additional routing register |
| 41008 | 0000 Dec | Additional routing register |
| 41009 | 0000 Dec | Additional routing register |

Data Area

| PLC Register | |
|---|---|
| 41100 | The PLC stores registers read from the JAGXTREME registers 40020-40027 starting here. |

Length

| | |
|---|---|
| 0008 | This value defines the length of the Data Area. |

## MSTR Instruction Example to Write Floating Point Registers

This example shows how to use the MSTR instruction to write to the floating point command registers in the JAGXTREME terminal. In this example, the terminal is at node 3. The user must configure the terminal to run in floating point mode using the <Config Options><Modbus Plus><Scale Setup><Data Format?> menus. This example writes to the floating point command registers for scale 1 and scale 2.

Control Block

| PLC Register | Content | |
|---|---|---|
| 41201 | 0001 Dec | Write command |
| 41202 | xxxx Hex | Error status |
| 41203 | 0006 Dec | Number of registers to be written |
| 41204 | 0047 Dec | Starting register for floating point command registers. (47 = 40047). |
| 41205 | 0003 Hex | Routing path. JAGXTREME address = node 3 |
| 41206 | 0001 Hex | Data slave routing path. |
| 41207 | 0000 Dec | Additional routing register |
| 41208 | 0000 Dec | Additional routing register |
| 41209 | 0000 Dec | Additional routing register |

Data Area

| PLC Register | |
|---|---|
| 41250 | MSTR writes data from the PLC registers starting at this address to the JAGXTREME registers 40047-40052. |

Length

| | |
|---|---|
| 0006 | This integer value defines the length of the Data Area. |

# Quantum 242 02 PLC with NOM 211 00 Module

The routing path in the MSTR command may be different when the Quantum 242 02 PLC has a NOM 211 00 module. Both the NOM 211 00 module and the Quantum 242 02 PLC have Modbus Plus ports. If the terminal connects to the PLC through the Modbus Plus port on the Quantum 242 02 Controller card, then there is no change to the routing paths as shown in the examples for a Modicon 984-385E.

If the terminal connects to the PLC though the NOM 211 00 Modbus Plus Port, then the routing path does change. The slot address of the NOM module in must be provided in the upper byte of the first register of the routing path. The slot address is the physical position of the NOM module in the PLC mounting rack.

For example, if the NOM module is in slot 3 and the terminal is at node address 7, the MSTR command to read the terminal floating point registers for scale 1 and scale 2 is as follows:

Control Block

| Register | Content | |
|---|---|---|
| 41001 | 0002 Dec | Read command |
| 41002 | xxxx Hex | Error status |
| 41003 | 0006 Dec | Number of registers to be read |
| 41004 | 0020 Dec | Starting register for JAGXTREME terminal status and floating point weight registers. (20 = 40020). |
| 41005 | 0307 Hex | Routing path. |
| | NOM address = slot 3. | |
| | JAGXTREME terminal address = node 7. | |
| 41006 | 0001 Dec | Data slave routing path. |
| 41007 | 0000 Dec | Additional routing register |
| 41008 | 0000 Dec | Additional routing register |
| 41009 | 0000 Dec | Additional routing register |

Data Area

PLC Register

41100 The PLC stores registers read from the JAGXTREME registers 40020-40027 starting here.

Length

0008 This value defines the length of the Data Area.

For your notes

# 5 Appendix

## PLC Custom Interface

JagBASIC applications use Shared Data to communicate custom fields with a PLC in floating point mode. There are unique Shared Data field names for Scale A and Scale B. Each status bit is one bit long. The floating point and string fields are each four bytes long. The PLC and the JagBASIC application define the meaning of the fields. The JAGXTREME terminal sends the PLC input fields designated as "Real-Time" to the PLC at every weight update. It sends or receives the other fields only when the PLC specifically requests them.

The input fields to the PLC from Scale A are:

| | | | |
|---|---|---|---|
| /s_250 | Unsigned Bit | Real-Time | PLC Custom Status 1 from Scale A |
| /s_251 | Unsigned Bit | Real-Time | PLC Custom Status 2 from Scale A |
| /bas18 | Floating Point | Real-Time | Custom Input 1 from Scale A to PLC |
| /bas19 | 4 Byte String | Real-Time | Custom Input 2 from Scale A to PLC |
| /bas20 | Floating Point | Custom Input 3 from Scale A to PLC | |
| /bas21 | 4 Byte String | Custom Input 4 from Scale A to PLC | |

The output fields from the PLC to Scale A are:

| | | |
|---|---|---|
| /bas14 | Floating Point | Custom Output 1 to Scale A to PLC |
| /bas15 | 4 Byte String | Custom Output 2 to Scale A to PLC |
| /bas16 | Floating Point | Custom Output 3 to Scale A to PLC |
| /bas17 | 4 Byte String | Custom Output 4 to Scale A to PLC |

The input fields to the PLC from Scale B are:

| | | | |
|---|---|---|---|
| /s_252 | Unsigned Bit | Real-Time | PLC Custom Status 1 from Scale B |
| /s_253 | Unsigned Bit | Real-Time | PLC Custom Status 2 from Scale B |
| /bas26 | Floating Point | Real-Time | Custom Input 1 from Scale B to PLC |
| /bas27 | 4 Byte String | Real-Time | Custom Input 2 from Scale B to PLC |
| /bas28 | Floating Point | Custom Input 3 from Scale B to PLC | |
| /bas29 | 4 Byte String | Custom Input 4 from Scale B to PLC | |

The output fields from the PLC to Scale B are:

| | | |
|---|---|---|
| /bas22 | Floating Point | Custom Output 1 to Scale B from PLC |
| /bas23 | 4 Byte String | Custom Output 2 to Scale B from PLC |
| /bas24 | Floating Point | Custom Output 3 to Scale B from PLC |
| /bas25 | 4 Byte String | Custom Output 4 to Scale B from PLC |

# JagBASIC to Analog Output Shared Data Interface

JagBASIC variables may be used as sources for channel 1, or channel 2, or both channels. The JagBASIC variable for channel 1 is floating point variable /bas18. The JagBASIC source variable for channel 2 is floating point variable /bas20. JagBASIC may be used as a source for one channel and scale source for the other channel.

You must enter the zero and span preset values for the JagBASIC sources in the <Config Options> <Analog Output> setup menus. You can also trim the zero and span values for the JagBASIC sources, but the value that you are trimming must be set by a JagBASIC command before entering setup. This allows you to "calibrate" the Analog Output card.

For example, if you wish to trim the span value for a JagBASIC source for channel 2, you must enter the span value into /bas20. Then you can enter setup and use the Analog Output setup menu to trim the span value.

**METTLER TOLEDO**
**1900 Polaris Parkway**
**Columbus, Ohio 43240**
Phone: (800) 786-0038
(614) 438-4511
Fax: (614) 438-4958

Internet: www.mt.com

D1288420A
(01-05).00

METTLER TOLEDO® is registered trademark of Mettler-Toledo, Inc.
©2005 Mettler-Toledo Inc.
Printed in USA