RLMK21 Single Point, Stainless Steel

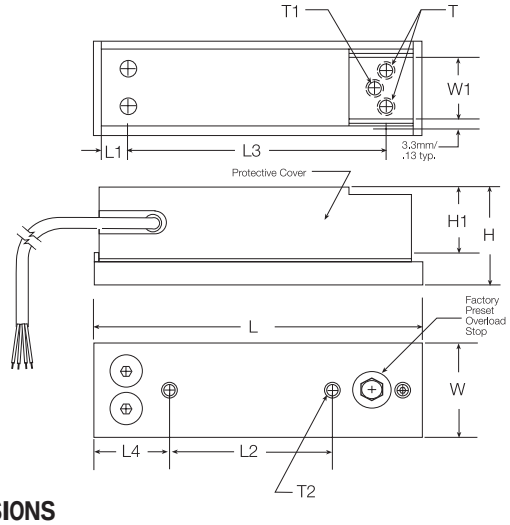

RATED CAPACITY	DIMENSIONS H	H1	L	L1	L2	L3	L4	T	T1	T2	W	W1
kg/millimeters												
4.5-50	38.1	25.4	133.4	11.2	66.8	104.9	30.5	1/4-20 UNF 2B Thd. x 12.7 Min. DP	1/4-28 UNF 2B Thru 6.7 DIA. x 10.2 DP	1/4-28 UNF Thd.	38.1	25.4
lb/inches												
9.9-110.3	1.50	1.00	5.25	.44	2.63	4.13	1.20	1/4-20 UNF 2B Thd. x .50 Min. DP	1/4-28 UNF 2B Thru .265 DIA x .4 DP	1/4-28 UNF Thd.	1.50	1.00

SPECIFICATIONS

Full Scale Output:	2.0 mV/V
Bridge Resistance:	350 ohms
Material/Finish:	Stainless steel
Temperature:	Compensated range 0°F to 150°F/-18°C to 65°C
Safe Overload:	500% Full scale
Rated Excitation:	0-15 VDC
Total Error:	0.03% Full scale
Insulation Resistance:	>2000 megohms
Seal Type:	Environmentally protected
Cable Length:	3.1m/10'
Cable Color Code:	Red ..... + Excitation Black ..... – Excitation Green ... + Signal White ..... – Signal Orange ... Shield
Warranty:	2 years

RLMK21 ORDER INFORMATION

Load Rating	Part #	Suggested List Price
4.5 kg (9.9 lb)	33296	$435.00
7.5 kg (16.5 lb)	33297	$435.00
18 kg (39.7 lb)	33298	$435.00
35 kg (77.2 lb)	33299	$435.00
50 kg (110.3 lb)	47951	$435.00

INTERCHANGEABLE PRODUCTS

Manufacturer	Model
NCI/Weigh-Tronix®	3270 Series Checkweigher

NCI and Weigh-Tronix are registered trademarks of Weigh-Tronix, Inc.